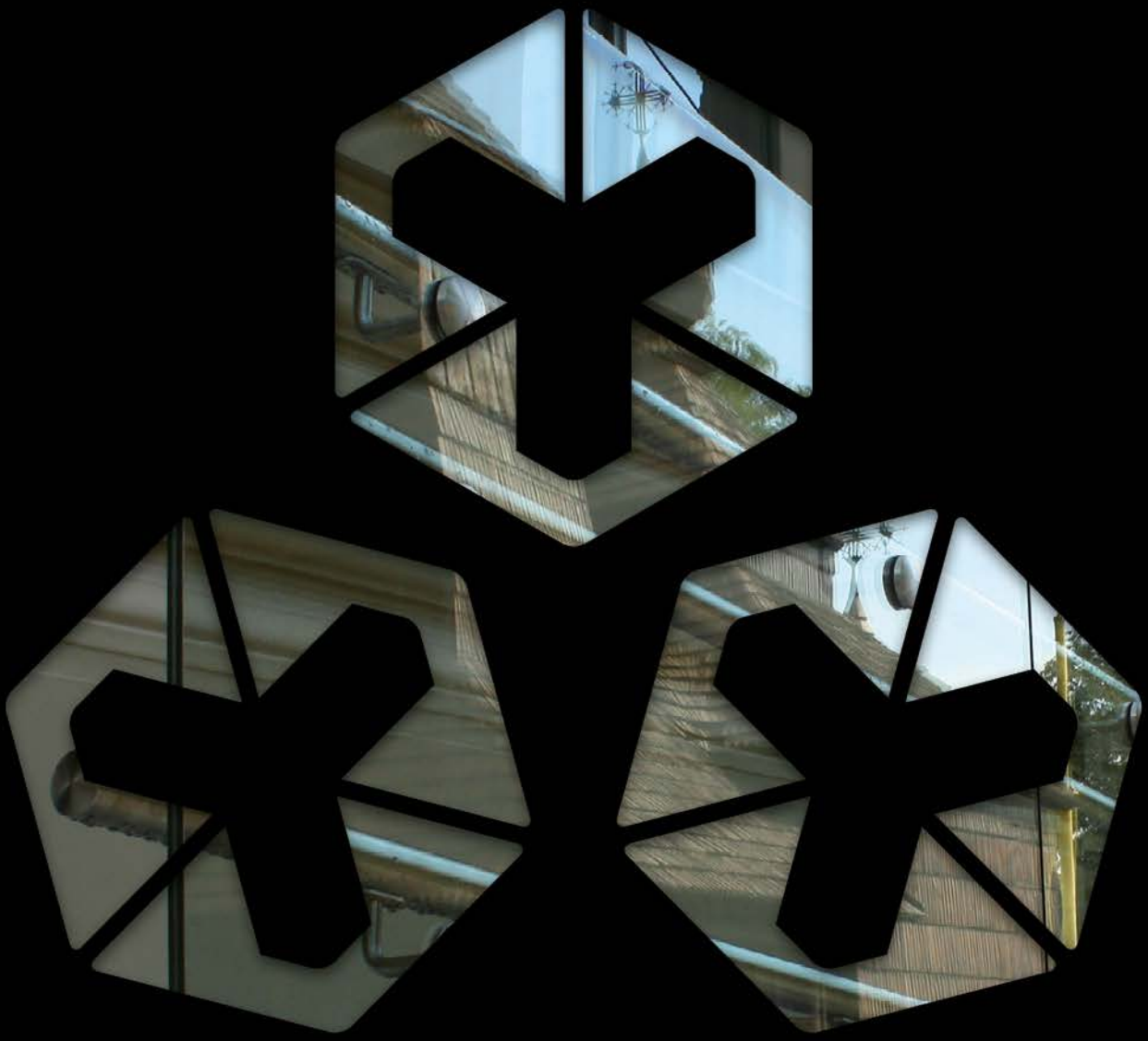

INOX 2019/2020

umakov®
PRODUCT/SYSTEM/DESIGN

QUALIFORM

Notified body No. 1544

QUALIFORM, a.s., Mlaty 672/8, 642 00 Brno – Bosonohy, CZ

CERTIFICATE OF CONFORMITY
OF THE FACTORY PRODUCTION CONTROL

No. 1544-CPR-2018-1328-1

In compliance with Regulation 305/2011/EU of the European Parliament and of the Council of 9th March 2011 (the Construction Products Regulation or CPR), this certificate applies to the construction product

Steel and aluminium structural elements, components, sections and constructions

range:

production of the execution class up to EXC2, declaration acc. to methods: 1, 2, 3a, 3b

placed on the market under the name or trade mark of

Vladimír Lacko – UMAKOV
082 37 Fričovce 309, SK
ID: 10740970

and produced in the manufacturing plant

Vladimír Lacko – UMAKOV
U-001, U-002, U-003 (codes of manufacturing plant)

This certificate attests that all provisions concerning the assessment and verification of constancy of performance described in Annex ZA of the standard

EN 1090-1:2009+A1:2011

under system 2+ are applied and that
the factory production control is assessed to be in conformity with the applicable requirements.

This certificate was first issued on 28th March 2018 and will remain valid as long as neither the harmonised standard, the construction product, the AVCP methods nor the manufacturing conditions in the plant are modified significantly, unless suspended or withdrawn by the notified factory production control certification body.

Brno, 28th March 2018

NOTIFIED BODY No. 1544 QUALIFORM UNMZ

Jan Svoboděník, M.Sc.
Representative of the Notified Body No. 1544

Materialprüfungsamt – Glasprüfstelle
an der Zweigstelle Würzburg
Allgemeines bauaufsichtliches Prüfzeugnis P-169901-LGA
Zertifiziert nach DIN EN ISO 9001 / 14001

LGA

Allgemeines bauaufsichtliches Prüfzeugnis

Prüfzeugnis-Nummer:	P-169901-LGA
Gegenstand	Absturzsichernde Verglasung der Kategorie C1 nach DIN 18008-4 gemäß lfd. Nr. 2.12 Bauregelliste A Teil 3 – Ausgabe 2015/2
Anwendung	Geländersystem mit Glasausfachung
Antragsteller	UMAKOV Fricovce 309 082 37 Fricovce, Slowakei
Ausstellungsdatum	15.03.2016
Geltungsdauer bis	14.03.2021

Aufgrund dieses allgemeinen bauaufsichtlichen Prüfzeugnisses ist die oben genannte Bauart nach den Landesbauordnungen der Länder der Bundesrepublik Deutschland verwendbar

Dieses allgemeine bauaufsichtliche Prüfzeugnis umfasst 8 Seiten.

Der Bearbeiter und Leiter der Glasprüfstelle:

Dipl.-Ing. Katz
Ltd. Baudirektor

Dieses Prüfzeugnis darf nur in vollen Wortlaut veröffentlicht werden.
Jede Veröffentlichung in Kürzung oder Auszug bedarf der vorherigen Genehmigung durch die Prüfstelle

H:\DATA\BSW\EP\Glas\Vorlage\P169901_32\P169901.doc Seite 1 von 8

LGA - Zweigstelle Würzburg · Deelmannsweg 31, 97082 Würzburg
Telefon: 0931 4196-113 · Telefax: 0931 4196-200
E-Mail: wuerzburg@lga.de Internet: www.lga.de

LGA® Landesgewerbeanstalt Bayern
Körperschaft des öffentlichen Rechts
Sitz und Registergericht Nürnberg HRA 14020
Vorstand: Thomas Weingärtner (Sprecher), Hans-Peter Timm
Vors. d. Aufsichtsrats: Bernd Graßmann

Sloločnosť Umakov už viac ako 25 rokov vyrába a predáva komponenty pre nerezové a sklenené zábradlia.

Spoločnosť má širokú sieť partnerov a pobočiek na Slovensku, v Českej republike, Poľsku a Maďarsku. Má vlastnú produkciu, obchod a administrativu na ploche viac ako 25 000 m2.

Vysoká kvalita, rýchle doručenie, viac ako 5000 druhov komponentov na sklade a profesionálna technická podpora robí v súčasnosti z Umakovu jedného z lídrov Európskeho trhu v predaji komponentov pre zábradlia.

Naše portfólio obsahuje sklenené systémy, prístrešky, schody, bránové príslušenstvo a kované komponenty.

Przez ponad 25 lat firma UMAKOV produkuje i sprzedaje elementy ze stali nierdzewnej oraz składniki dla balustrad szklanych

Działalnofć firmy Umakov jest realizowana w ich własnych oddziałach oraz sieciach partnerów na Słowacji, w Czechach, Polsce i na Węgrzech. Firma posiada również własną produkcję, przestrzenie handlowe oraz administracyjne o łącznej powierzchni około 25.000 m.kw.

Najwyższa jakofć, szybka dostawa, ponad 5000 typów komponentów na magazynie oraz profesjonalne wsparcie techniczne sprawia z firmy UMAKOV jednego z liderów na rynku europejskim w sprzedazy elementów do balustrad nierdzewnych.

Nasza oferta obejmuje również systemy szklane, zadaszenia, schody, bramy oraz elementy kute.

Az UMAKOV több, mint 25 éve gyárt és értékesít rozsdamentes acél-, és üvegkorlát elemeket.

Az UMAKOV üzleti tevékenységét saját leányvállalatain és partner hálózatain keresztül gyakorolja Szlovákiában, Csehországban, Lengyelországban és Magyarországon.
A cég saját gyártási tevékenysége, kereskedelmi és adminisztratív központja mintegy 25 000 m2 alapterületen helyezkedik el

Csúcs minőség, gyors szállítás, több, mint 5000 raktárkészleten lévő termék, valamint professzionális műszaki támogatás teszik az UMAKOV-ot ma Európa egyik vezető vállalatává a korlát elemek területén.

Választékunkban megtalálhatók még üveg rendszerek, előtetők, lépcsők, kaputechnika és kovácsoltvas termékek.

For over 25 years UMAKOV has produced and sold components for stainless steel and glass railings.

Umakov business activities are carried out in their own branches and network of partners in Slovakia, Czech Republic, Poland and Hungary. Company also owns their own production, commercial and administrative spaces with total area of about 25 000 sq.m.

Top quality, fast delivery, over 5000 types of components in stock and professional technical support makes UMAKOV today one of Europe's market leaders in railing components.

Our portfolio also includes glass systems, canopies, stairs, gate accesories and forged components.

Firma UMAKOV produziert und verkauft die Komponente für Edelstahl- und Glasgeländer schon länger als 25 Jahren.

UMAKOV hat Partnern und Filialen in der Slowakei, in der Tschechischen Republik, in Polen und Ungarn. Das Unternehmen verfügt über eigene Produktion, Geschäft und Betriebsverwaltung auf der Fläche von ca 25 000 m2.

Hohe Qualität, schnelle Lieferung, mehr als 5000 Arten von Komponenten auf dem Lager und professionelle technische Unterstützung , das alles macht von UMAKOV einer der europäischen Marktführer im Verkauf von Komponenten für Geländer.

Unser Portfolio umfasst Glassysteme, Vordachsysteme, Treppen, Tor Zubehör und Schmiedeteile.

Depuis plus de 25 ans UMAKOV produit et vend des composants pour les garde-corps inox et verre.

La société UMAKOV dispose d'un réseau de filiales et partenaires en Slovaquie, République Tchèque, Pologne et Hongrie. Ella possède ses propres espaces de production, de vente, au sein de son siège administratif, d'une surface d'environ 25 000 m2.

Haute qualité, livraison rapide, plus de 5000 types de composants en stock et une assistance technique professionnelle, font aujourd'hui d'UMAKOV un des leaders européens dans le secteur des composants de garde-corps.

Notre gamme comprend également des systèmes en verre, auvents, escaliers, accessoires pour portails et pièces forgées.

Applus laboratories

AbP BAUART GEPRÜFT

LGA tested

LGA AbP Allgemeines bauaufsichtliches Prüfzeugnis P-169901-LGA

IKA TES

STATIC STUDIO

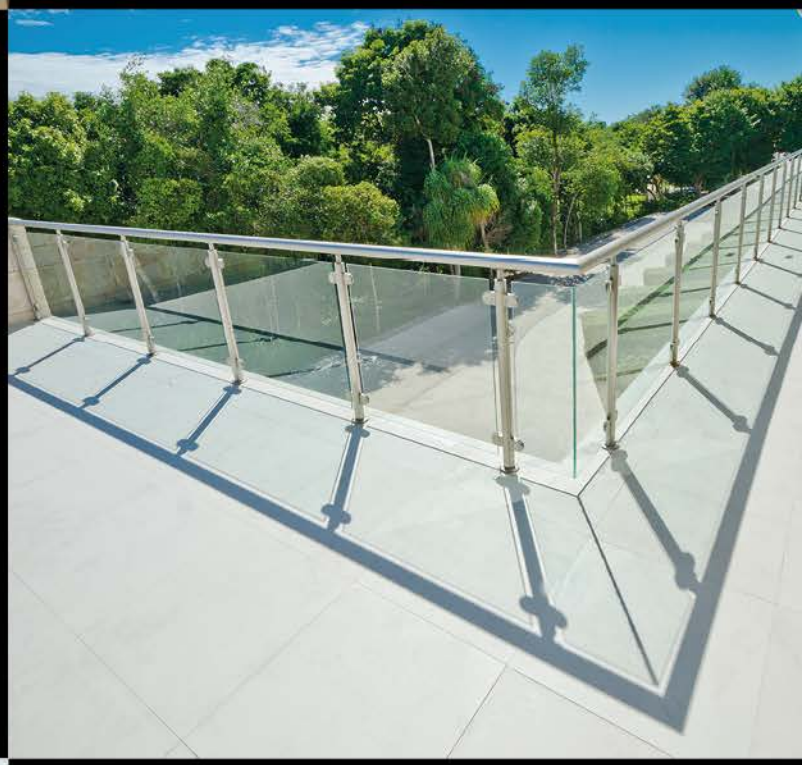

1 FRAMELESS GLASS RAILING

umakov®
PRODUCT/SYSTEM/DESIGN

1.1 AL PROFILE SYSTEM

U PROFILE
TOP MOUNT
FIX

AL/0002
AL/0004
AL/0008

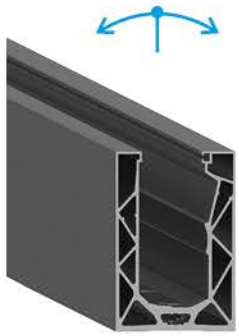

U PROFILE
TOP MOUNT
FLEX, LED

AL/0012
AL/0014
AL/0016

F PROFILE
TOP MOUNT
FIX

AL/0006
AL/0010

U PROFILE
SIDE MOUNT
FIX

AL/0003
AL/0005
AL/0007
AL/0009

Y PROFILE
SIDE MOUNT
FIX

AL/0011
AL/0013
AL/0015

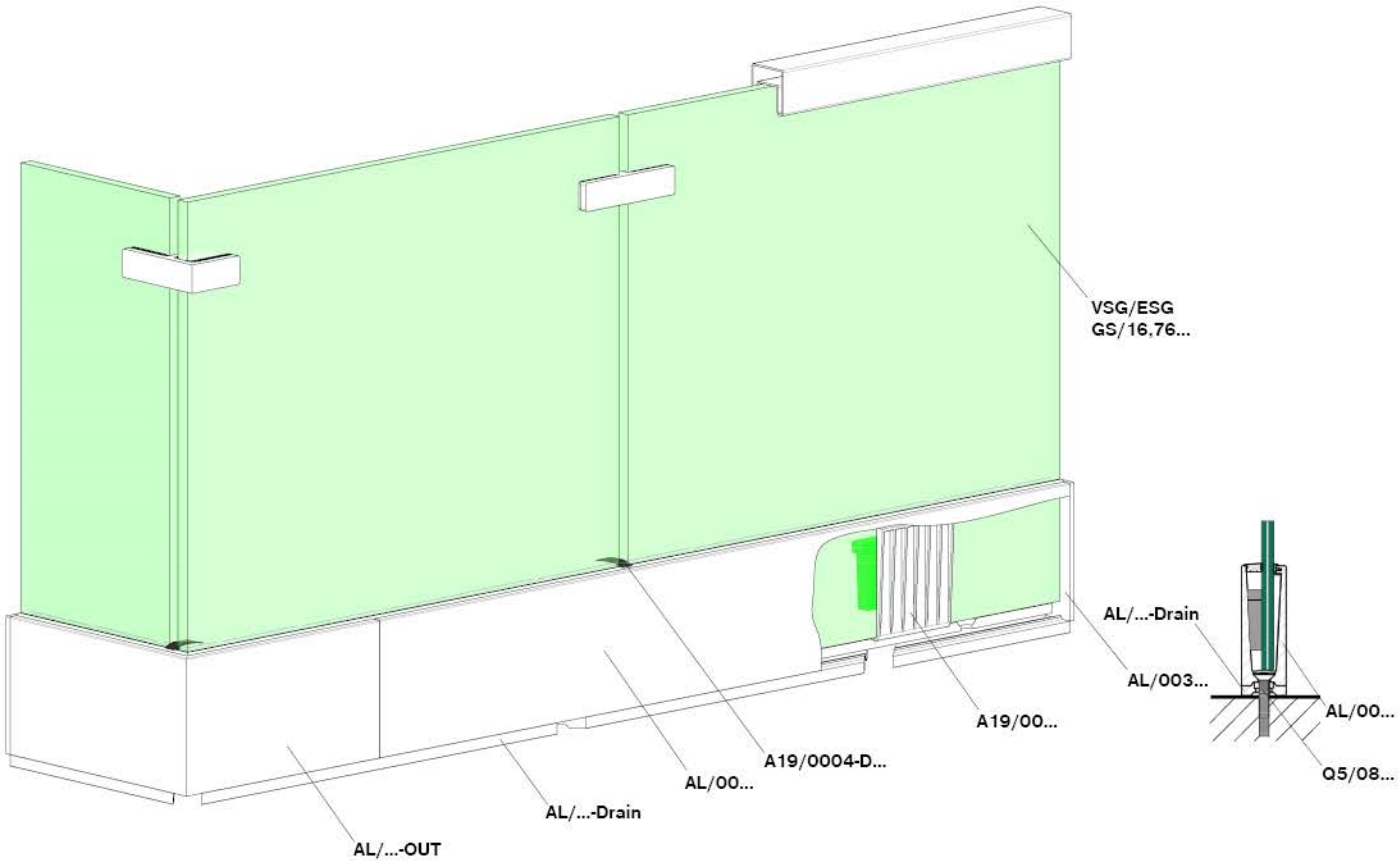
VSG/ESG
GS/16,76...
AL/...-Drain
AL/003...
AL/00...
Q5/08...
A19/00...
A19/0004-D...
AL/00...
AL/...-Drain
AL/...-OUT

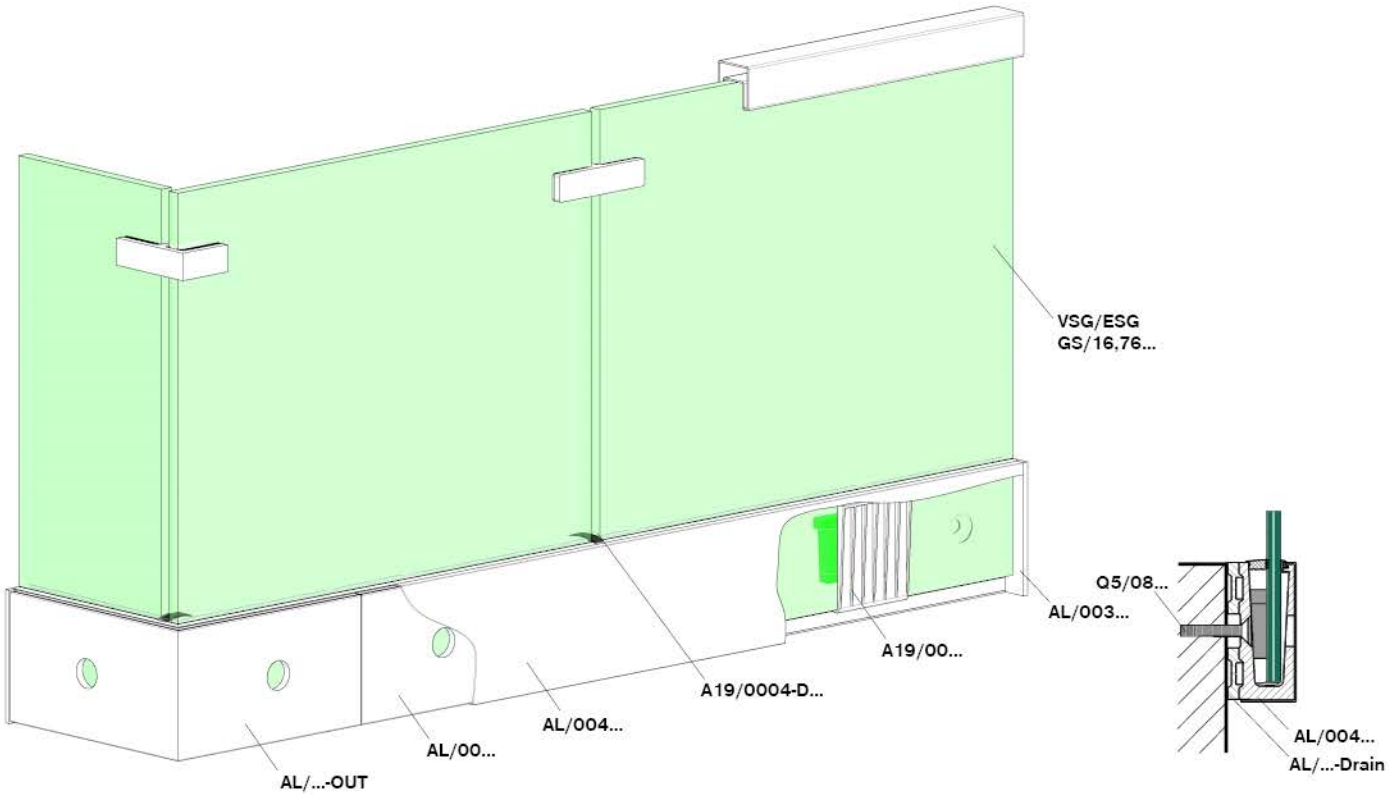
VSG/ESG
GS/16,76...
Q5/08...
AL/003...
A19/00...
A19/0004-D...
AL/004...
AL/00...
AL/...-OUT
AL/004...
AL/...-Drain

Material	Finish	Effect	art.	L	G/h	glass t 12-25,52	kg/m		
ALUMINIUM	satin	ELOX	AL/0004-1250-S-E	1250	1kN	12-21,52	6		top
			AL/0004-2500-S-E	2500					
			AL/0004-5000-S-E	5000					
		INOX	AL/0004-1250-S-VA	1250					
			AL/0004-2500-S-VA	2500					
			AL/0004-5000-S-VA	5000					
	natural		AL/0004-2500-N-B	2500					
			AL/0004-5000-N-B	5000					
	satin	ELOX	AL/0008-2500-S-E	2500	3kN	21,52-25,52	7,6		new
			AL/0008-5000-S-E	5000					
			AL/0002-6000-S-E	6000	1kN	12,76-21,52	9		
		INOX	AL/0002-6000-S-VA						
			AL/0012-2500-S-VA	2500	1kN	17,52-21,52	6,7		
		ELOX	AL/0014-3000-S-E	3000	1kN	17,52	3,9	✓	✓
			AL/0014-6000-S-E	6000					
			AL/0016-3000-S-E	3000	2kN		4,8		
			AL/0016-6000-S-E	6000					

Material	Finish	Effect	art.	L	G/h	glass t 12-25,52	kg/m	
ALUMINIUM	satin	ELOX	AL/0006-1250-S-E	1250	1kN	12-21,52	7,6	new
			AL/0006-2500-S-E	2500				top
			AL/0006-5000-S-E	5000				
			AL/0010-6000-S-E	6000	3kN	12,76-21,52	10,5	
		INOX	AL/0010-6000-S-VA					

Material	Finish	Effect	art.	L	G/h	glass t 12-25,52	kg/m	
ALUMINIUM	satin	ELOX	AL/0005-1250-S-E	1250	1kN	12-21,52	6,4	top
			AL/0005-2500-S-E	2500				
			AL/0005-5000-S-E	5000				
			AL/0005-D-2500-S-E	2500				new
			AL/0005-D-5000-S-E	5000				
			AL/0009-2500-S-E	2500	3kN	21,52-25,52	7,6	
			AL/0009-5000-S-E	5000				
			AL/0003-6000-S-E	6000	1kN	12,76-21,52	3,9	
		INOX	AL/0003-6000-S-VA					
		ELOX	AL/0007-6000-S-E		3kN		4,8	
		INOX	AL/0007-6000-S-VA					

Material	Finish	Effect	art.	L	G/h	glass t 12-25,52	kg/m	
ALUMINIUM	natural	ELOX	AL/0011-1250-N-E	1250	1kN	12-21,52	7,9	
			AL/0011-2500-N-E	2500				
			AL/0011-5000-N-E	5000				top

Material	Finish	Effect	art.	L	G/h	glass t 12-25,52	kg/m	
ALUMINIUM	natural	ELOX	AL/0013-6000-N-E	6000	1kN	12,76-21,52	13,5	
			AL/0015-6000-N-E		3kN			new

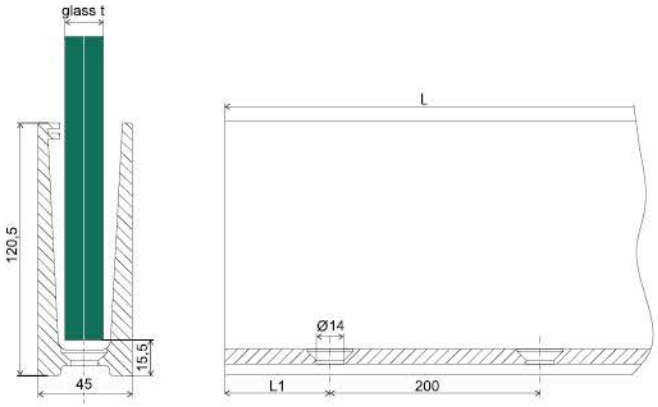

STATIC STUDIO

Material	Finish	Effect	art.	L	L1	G/h	glass t	FIX-SET			
ALUMINIUM	satin	ELOX	AL/0004-1250-S-E	1250		1kN	12,00-21,52	A19/0004-...	AL/0034... AL/1334... AL/1734...	AL/0004...IN AL/0004..OUT	AL/0004...Drain
			AL/0004-2500-S-E	2500	50						
			AL/0004-5000-S-E	5000	100						
		INOX	AL/0004-1250-S-VA	1250							-
			AL/0004-2500-S-VA	2500	50						
			AL/0004-5000-S-VA	5000	100						
	natural		AL/0004-2500-N-B	2500	50						
			AL/0004-5000-N-B	5000	100						

top

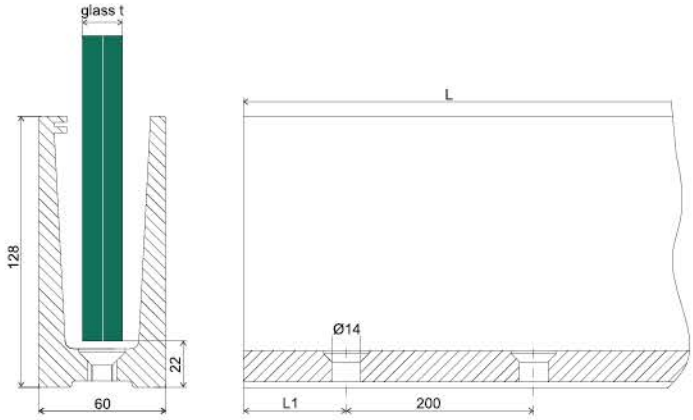

STATIC STUDIO

Material	Finish	Effect	art.	L	L1	G/h	glass t	FIX-SET			
ALUMINIUM	satin	ELOX	AL/0008-2500-S-E	2500	50	3kN	21,52-25,52	A19/0004-...	AL/0038...	-	-
			AL/0008-5000-S-E	5000	100						

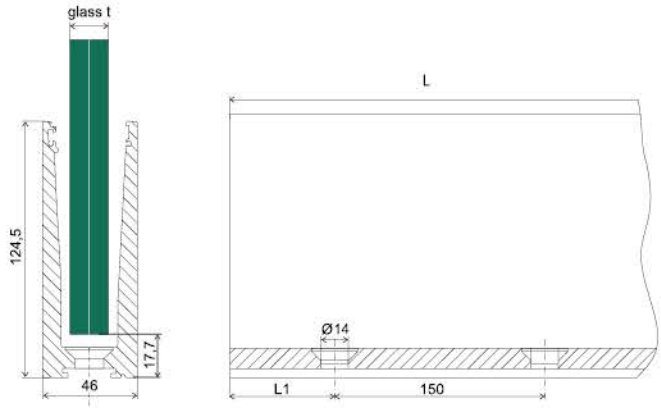

Material	Finish	Effect	art.	L	L1	G/h	glass t	FIX-SET			
ALUMINIUM	satin	ELOX	AL/0002-6000-S-E	6000	75	1kN	12,76-21,52	AL/0002-...	AL/0032...	-	AL/0002...Drain
		INOX	AL/0002-6000-S-VA								

new
new

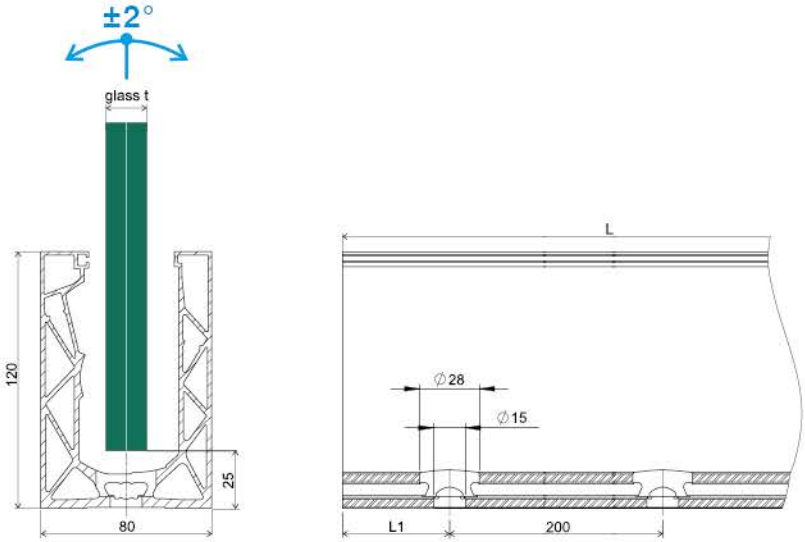

Material	Finish	Effect	art.	L	L1	G/h	glass t	FIX-SET				
ALUMINIUM	satin	INOX	**AL/0012-2500-S-VA**	2500	50	1kN	17,52-21,52	A19/0012...	AL/0034-012-S-VA			new

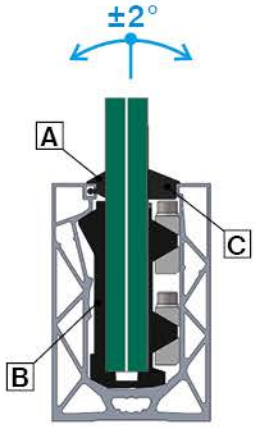

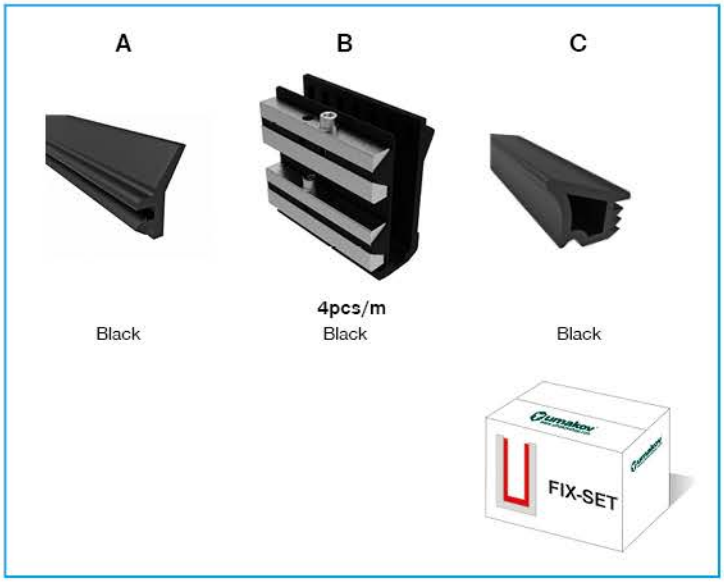

glass t	L	FIX-SET (pack)	
17,52	2500	**A19/0012-018-02.5**	new
21,52		**A19/0012-022-02.5**	new

Material	Finish	art.	L	d	
AISI304	satin	A19/0012-pin	30	8	new

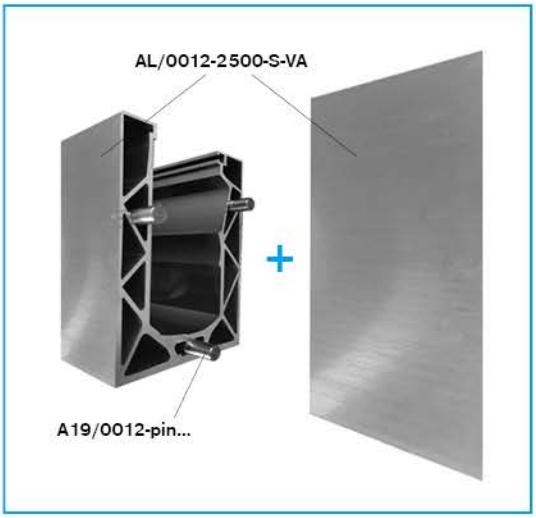

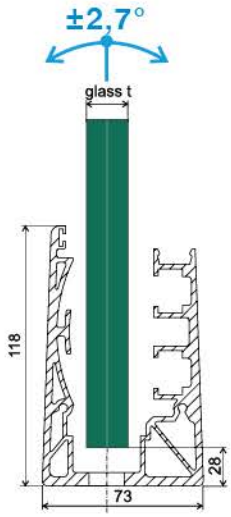

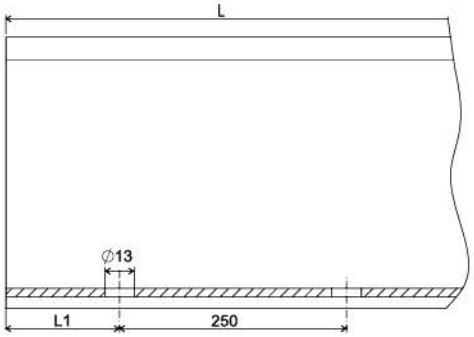

Material	Finish	Effect	art.	L	L1	G/h	glass t	FIX-SET				
ALUMINIUM	satin	ELOX	AL/0014-3000-S-E	3000	125	1kN	17,52	A19/0014-018	AL/0034-014-S-E			new
			AL/0014-6000-S-E	6000								new
			AL/0016-3000-S-E	3000	125	2kN						new
			AL/0016-6000-S-E	6000								new

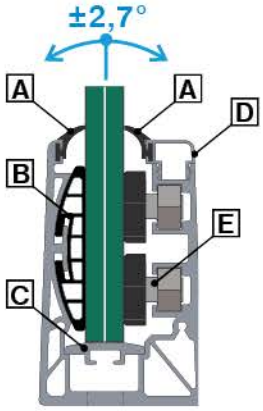

Glass t	L	FIX-SET (pack)	
17,52	3000	A19/0014-018-03.0	new
	6000	A19/0014-018-06.0	new

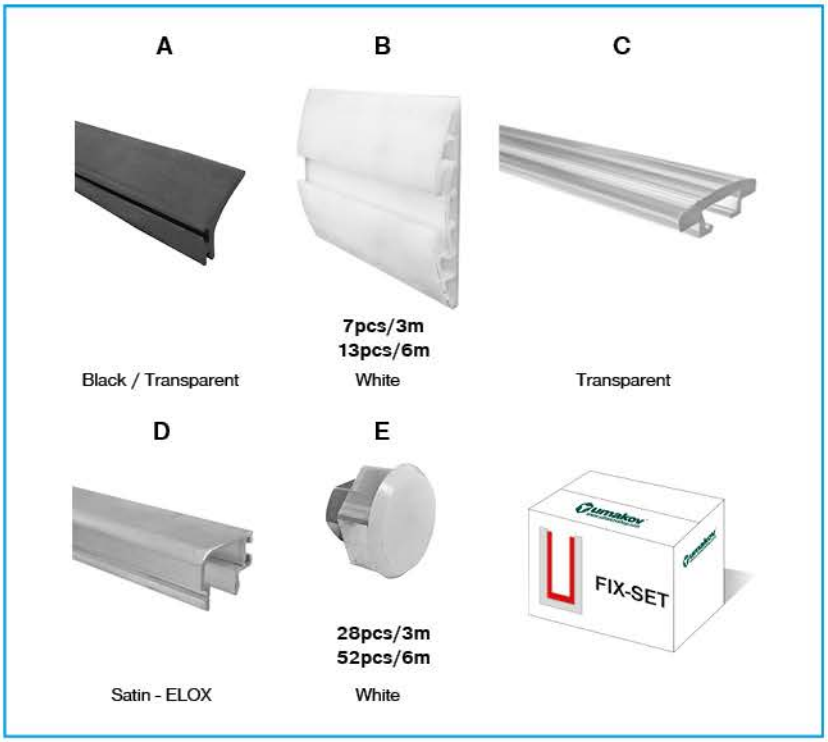

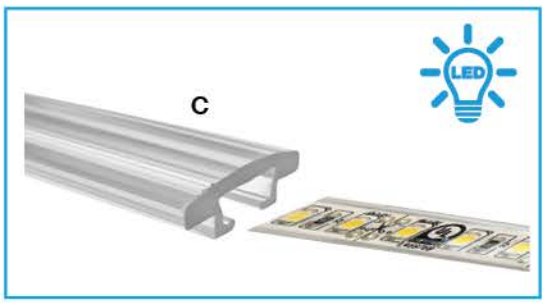

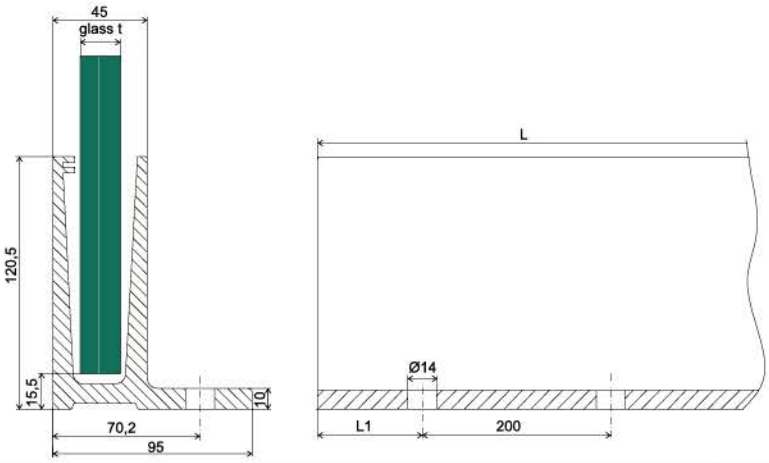

STATIC STUDIO

Material	Finish	Effect	art.	L	L1	G/h	glass t	FIX-SET				
ALUMINIUM	satin	ELOX	AL/0006-1250-S-E	1250		1kN	12,00-21,52	A19/0004-...	AL/0034-... AL/0035-...	AL/0006...IN AL/0006...OUT	-	-
			AL/0006-2500-S-E	2500	50							
			AL/0006-5000-S-E	5000	100							

top

Material	Finish	Effect	art.	color	anchoring
ALUMINIUM	satin	ELOX	AL/0006-ATYP	RAL...	

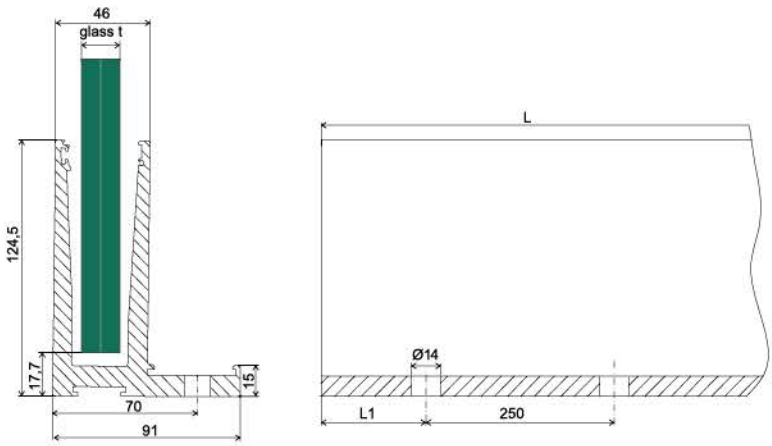

Applus laboratories

Material	Finish	Effect	art.	L	L1	G/h	glass t	FIX-SET				
ALUMINIUM	satin	ELOX	AL/0010-6000-S-E	6000	125	3kN	12,76-21,52	A19/0002-...	AL/0038-... AL/0039-...	-	-	AL/0049...
		INOX	AL/0010-6000-S-VA									

new
new

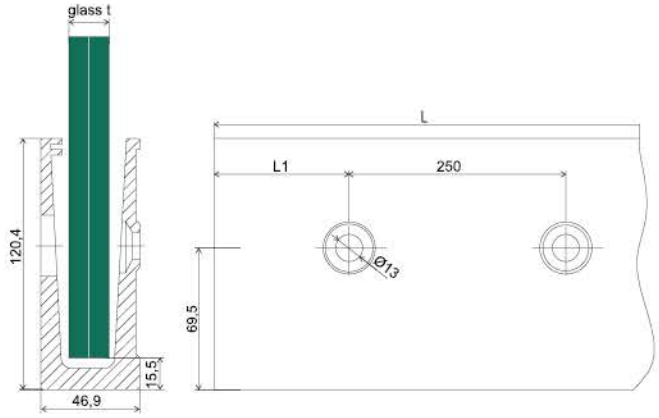

STATIC STUDIO

Material	Finish	Effect	art.	L	L1	G/h	glass t	FIX-SET				
ALUMINIUM	satin	ELOX	AL/0005-1250-S-E AL/0005-2500-S-E AL/0005-5000-S-E	1250 2500 5000	125	1kN	12,00-21,52	A19/0004-...	AL/0035... AL/0034...	AL/0005...IN AL/0005...OUT	-	A/6920-005 A24/0005-007

top

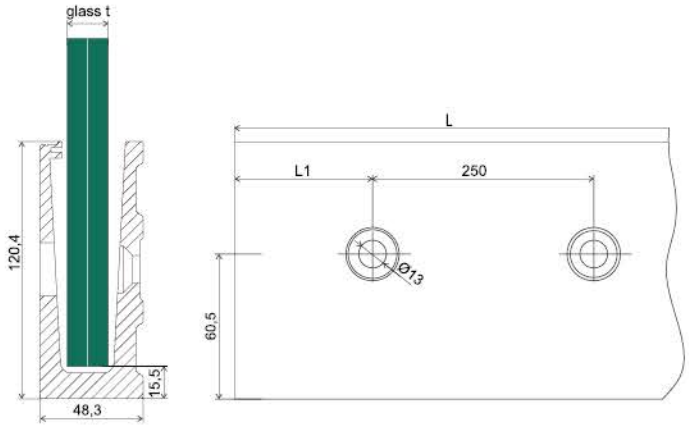

STATIC STUDIO

Material	Finish	Effect	art.	L	L1	G/h	glass t	FIX-SET				
ALUMINIUM	satin	ELOX	AL/0005-D-2500-S-E AL/0005-D-5000-S-E	2500 5000	125	1kN	12,00 - 21,52	A19/0004-...	AL/0034-005-D... AL/0035-005-D...	AL/0005-D...IN AL/0005-D...OUT	AL/0005... Drain	AL/0044... A24/0005...

new
new

STATIC STUDIO

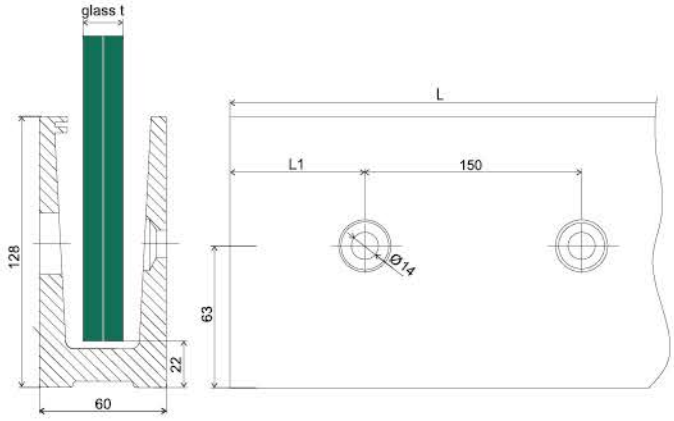

Material	Finish	Effect	art.	L	L1	G/h	glass t	FIX-SET				
ALUMINIUM	satin	ELOX	AL/0009-2500-S-E AL/0009-5000-S-E	2500 5000	50 100	3kN	21,52- 25,52	A19/0004-...	AL/0038-004-S-E	-	-	A24/0005-007

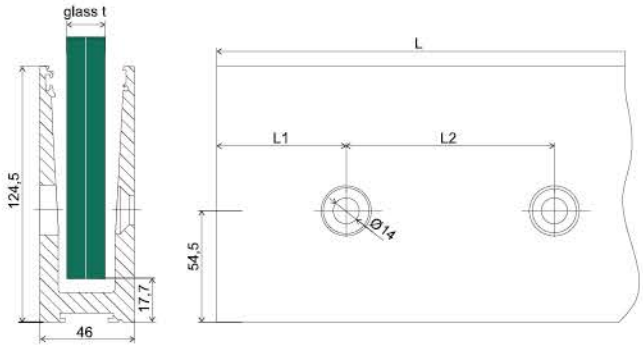

Material	Finish	Effect	art.	L	L1	L2	G/H	glass t	FIX-SET					
ALUMINIUM	satin	ELOX	AL/0003-6000-S-E	6000	125	250	1kN	12,76-21,52	A19/0002...	AL/0032-...	AL/0003...Drain	AL/0043...	new
		INOX	AL/0003-6000-S-VA										new
		ELOX	AL/0007-6000-S-E		75	150	3kN			AL/0033-...	AL/0007...Drain		new
		INOX	AL/0007-6000-S-VA										new

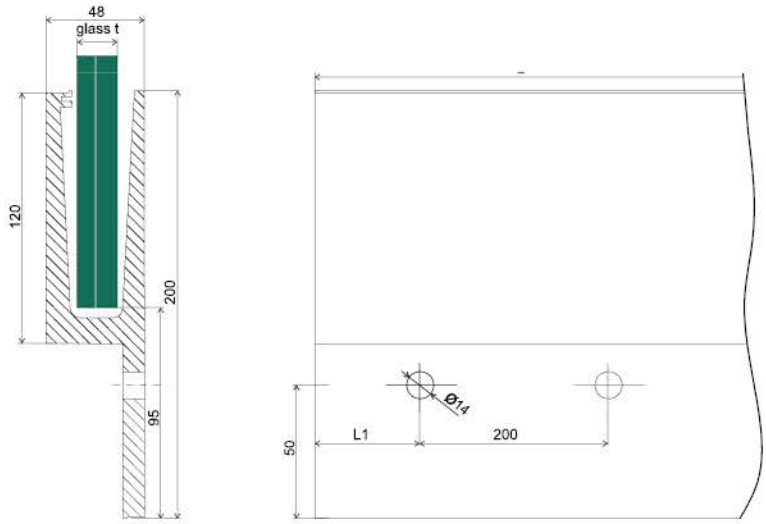

STATIC STUDIO

Material	Finish	Effect	art.	L	L1	G/h	glass t	FIX-SET					
ALUMINIUM	natural	ELOX	AL/0011-1250-N-E	1250	50	1kN	12-21,52	A19/0004...	AL/0034-...	AL/0011...IN AL/0011...OUT	AL/0041...	top
			AL/0011-2500-N-E	2500								
			AL/0011-5000-N-E	5000	100							

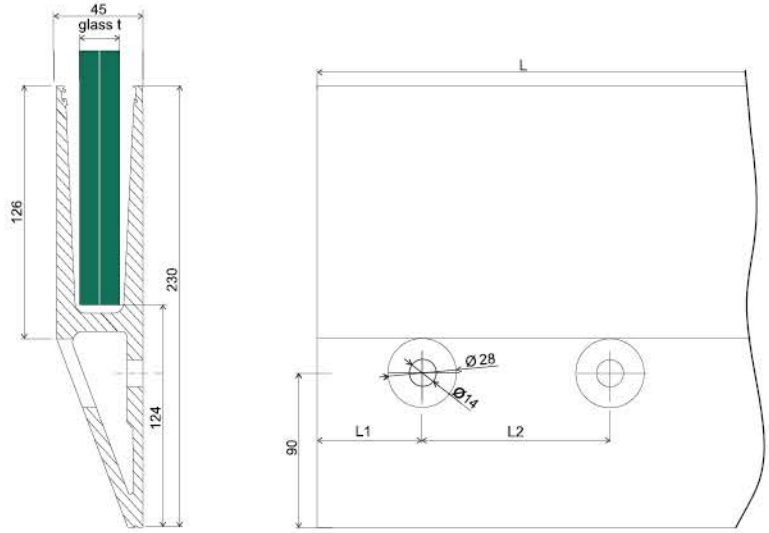

Material	Finish	Effect	art.	L	L1	L2	G/h	glass t	FIX-SET				
ALUMINIUM	natural	ELOX	AL/0013-6000-N-E	6000	150	300	1kN	12,76-21,52	A19/0002...		AL/0013-....Drain	AL/0042...	new
			AL/0015-6000-N-E		100	200	3kN				AL/0015-....Drain		new

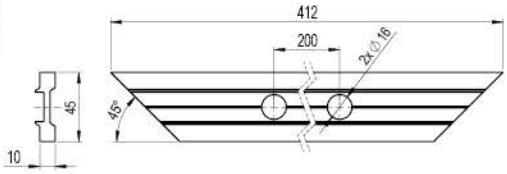

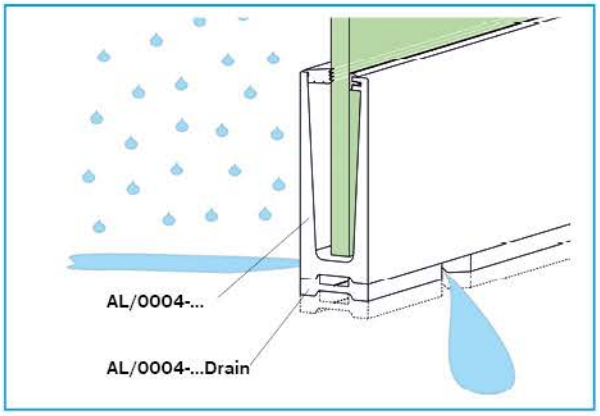

Material	Finish	Effect	art.	compatibility	pcs	
ALUMINIUM	satin	ELOX	**AL/0004-S-E-Drain**	AL/0004-1250...	4	new
				AL/0004-2500...	7	
		INOX	**AL/0004-S-VA-Drain**	AL/0004-5000...	13	new

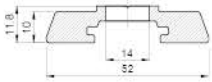

Material	Finish	Effect	art.	L	compatibility	
ALUMINIUM	satin	ELOX	**AL/0002-S-E-6000-Drain**	6000	AL/0002...	new
		INOX	**AL/0002-S-VA-6000-Drain**			

AL/0041...

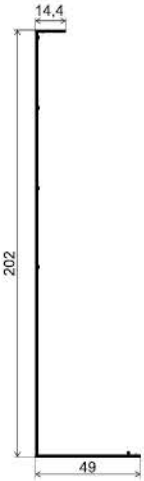

AL/0045...

Material	Finish	Effect	art.	L		
ALUMINIUM	satin	ELOX	**AL/0041-2500-S-E**	2500	AL/0011...	
			AL/0041-5000-S-E	5000		
		INOX	**AL/0041-2500-S-VA**	2500		
			AL/0041-5000-S-VA	5000		
		ELOX	**AL/0045-2500-S-E**	2500		new
			AL/0045-5000-S-E	5000		new

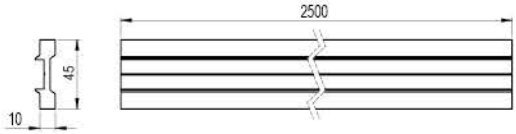

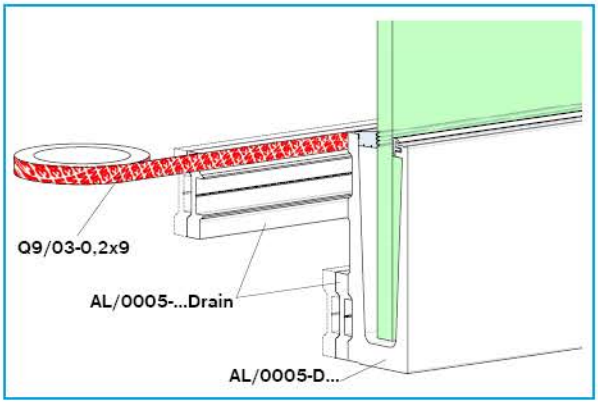

Material	Finish	Effect	art.	L	compatibility
ALUMINIUM	satin	ELOX	AL/0005-S-E-2500-Drain	2500	AL/0005-D...

new

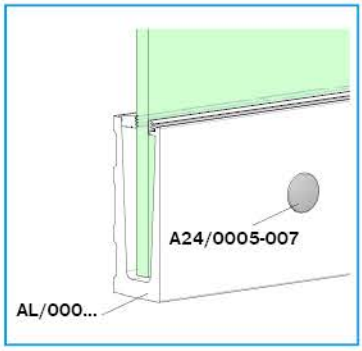

Material	Finish	art.	
PVC	gray	A24/0005-007	AL/0005... AL/0009...

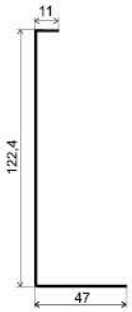

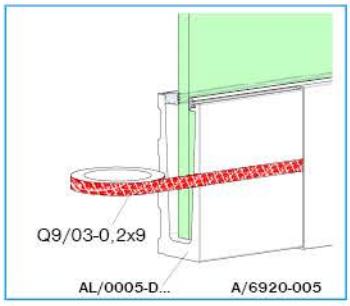

Material	Finish	art.	L		Q9/03...
AISI304	satin	A/6920-005	2500	AL/0005...	✓

Material	Finish	Effect	art.	L		Q9/03...	
ALUMINIUM	satin	ELOX	AL/0044-2500-S-E	2500	AL/0005-D...	✓	new
			AL/0044-5000-S-E	5000			new
	natural	black	AL/0044-2500-N-B	2500			new
			AL/0044-5000-N-B	5000			new

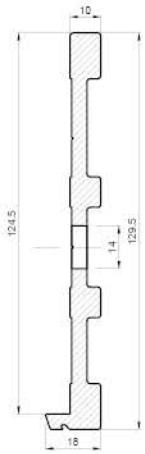

Material	Finish	Effect	art.	L	compatibility	
ALUMINIUM	satin	ELOX	**AL/0003-S-E-6000-Drain**	6000	AL/0003...	new
		INOX	**AL/0003-S-VA-6000-Drain**			new
		ELOX	**AL/0007-S-E-6000-Drain**		AL/0007...	new
		INOX	**AL/0007-S-VA-6000-Drain**			new

AL/0043-S-...

Material	Finish	Effect	art.	L		...Drain	Q9/03...	
ALUMINIUM	satin	ELOX	**AL/0043-S-E**	6000	AL/0003... AL/0007...	-	✓	new
		INOX	**AL/0043-S-VA**					new
		ELOX	**AL/0043-D-S-E**			✓		new
		INOX	**AL/0043-D-S-VA**					new

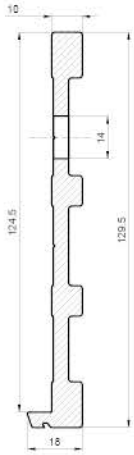

Material	Finish	Effect	art.	L	compatibility	
ALUMINIUM	natural	ELOX	**AL/0013-N-E-6000-Drain**	6000	AL/0013...	new
		ELOX	**AL/0015-N-E-6000-Drain**		AL/0015...	new

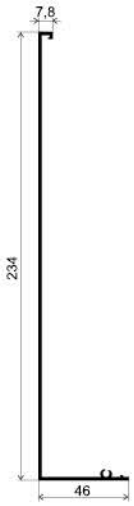

AL/0042-6000-S-...

Material	Finish	Effect	art.	L		...Drain	Q9/03...	
ALUMINIUM	satin	ELOX	**AL/0042-6000-S-E**	6000	AL/0013... AL/0015...	-	✓	new
		INOX	**AL/0042-6000-S-VA**					new
		ELOX	**AL/0042-6000-D-S-E**			✓		new
		INOX	**AL/0042-6000-D-S-VA**					new

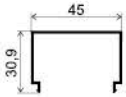

Material	Finish	Effect	art.	L	
ALUMINIUM	satin	ELOX	**AL/0049-S-E**	6000	AL/0010...
		INOX	**AL/0049-S-VA**		

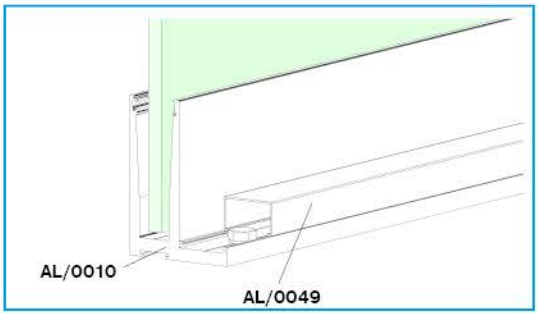


Material	Finish	Effect	art.	
ALUMINIUM	satin	ELOX	AL/0034-004-S-E	AL/0004...
		INOX	AL/0034-004-S-VA	
		black	AL/0034-004-S-EB	
		ELOX	AL/0038-004-S-E	AL/0008...
		ELOX	AL/0032-004-S-E	AL/0002...
		INOX	AL/0032-004-S-VA	

new
new
new
new


Material	Finish	Effect	art.	glass t	
ALUMINIUM	satin	ELOX	AL/1334-004-S-E-Left	12,76	AL/0004...
			AL/1334-004-S-E-Right		
		INOX	AL/1334-004-S-VA-Left		
			AL/1334-004-S-VA-Right		
		ELOX	AL/1734-004-S-E-Left	16,76	
			AL/1734-004-S-E-Right		
		INOX	AL/1734-004-S-VA-Left		
			AL/1734-004-S-VA-Right		

new
new
new
new


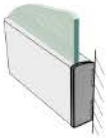
AL/0035...
AL/0033...

AL/0034...
AL/0032...

Material	Finish	Effect	art.	
ALUMINIUM	satin	ELOX	AL/0035-005-S-E	AL/0005...
			AL/0034-005-S-E	
			AL/0034-005-D-S-E	AL/0005-D...
		ELOX	AL/0038-004-S-E	AL/0009...
		ELOX	AL/0033-005-S-E	AL/0003...
			AL/0032-005-S-E	
		INOX	AL/0033-005-S-VA	AL/0007...
			AL/0032-005-S-VA	

new
new
new
new
new
new

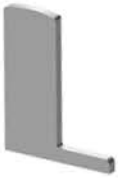
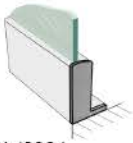
AL/0034...
AL/0039...
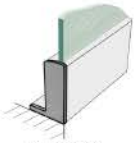
AL/0035...
AL/0038...

Material	Finish	Effect	art.	
ALUMINIUM	satin	ELOX	AL/0034-006-S-E	AL/0006...
			AL/0035-006-S-E	
		ELOX	AL/0039-006-S-E	AL/0010...
			AL/0038-006-S-E	
		INOX	AL/0039-006-S-VA	
			AL/0038-006-S-VA	

new
new


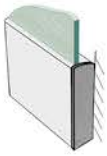

Material	Finish	Effect	art.	
ALUMINIUM	satin	ELOX	AL/0034-011-S-E	AL/00011...

new

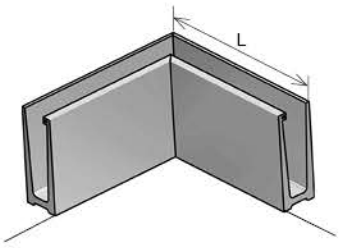

Material	Finish	Effect	art.	L
ALUMINIUM	satin	ELOX	AL/0004-S-E-90-IN	218
		INOX	AL/0004-S-VA-90-IN	
	natural	black	AL/0004-N-B-90-IN	
			AL/0004-IN-ATYP	

new

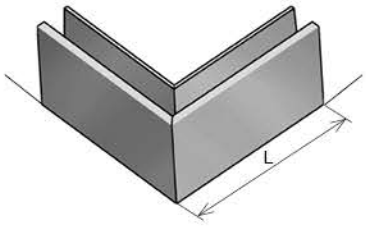

Material	Finish	Effect	art.	L
ALUMINIUM	satin	ELOX	AL/0004-S-E-90-OUT	218
		INOX	AL/0004-S-VA-90-OUT	
	natural	black	AL/0004-N-B-90-OUT	
			AL/0004-OUT-ATYP	

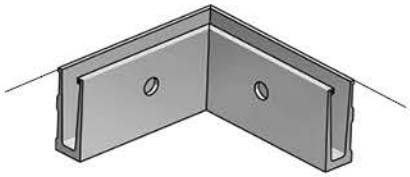

Material	Finish	Effect	art.	L
ALUMINIUM	satin	ELOX	AL/0005-S-E-90-IN	268
			AL/0005-D-S-E-90-IN	
			AL/0005-IN-ATYP	

new

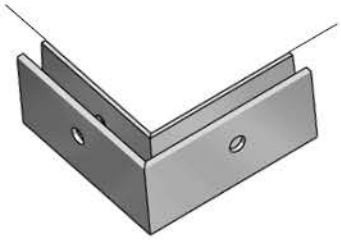

Material	Finish	Effect	art.	L
ALUMINIUM	satin	ELOX	AL/0005-S-E-90-OUT	268
			AL/0005-D-S-E-90-OUT	
			AL/0005-OUT-ATYP	

new

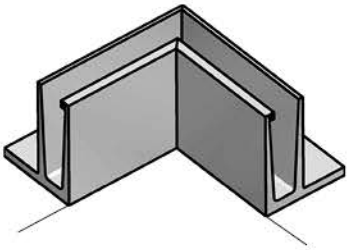

Material	Finish	Effect	art.	L
ALUMINIUM	satin	ELOX	AL/0006-S-E-90-IN	220

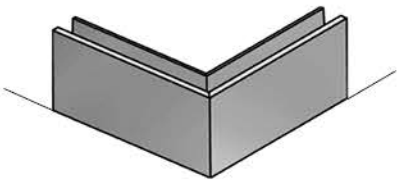

Material	Finish	Effect	art.	L
ALUMINIUM	satin	ELOX	AL/0006-S-E-90-OUT	260

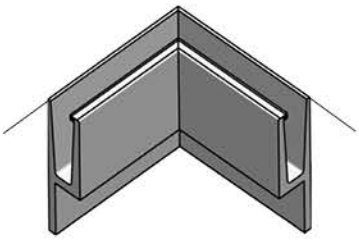

Material	Finish	Effect	art.	L
ALUMINIUM	satin	ELOX	AL/0011-N-E-90-IN	194

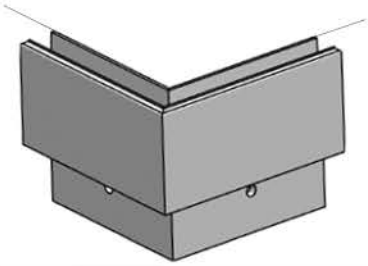

Material	Finish	Effect	art.	L
ALUMINIUM	satin	ELOX	AL/0011-N-E-90-OUT	242

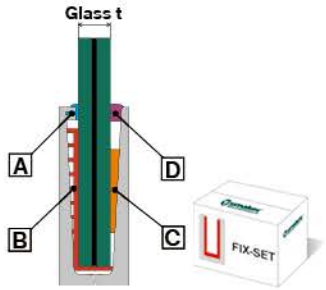

	A	B	C	D
				
	(black)	(4pcs/m) (gray)	(4pcs/m) (gray)	(black)

Glass t (mm)	L (m)	FIX-SET (pack)	- A19/0004-rubber F-...	+ A19/0004-L	+ A19/0004-plast...	+ A19/0004-rubber...
12	2,5	A19/0004-012-02.5				
	5	A19/0004-012-05.0				
	25	A19/0004-012-25.0				
12,76	2,5	A19/0004-013-02.5				
	5	A19/0004-013-05.0				
	25	A19/0004-013-25.0				
16,76	2,5	A19/0004-017-02.5				
	5	A19/0004-017-05.0				
	25	A19/0004-017-25.0				
17,52	2,5	A19/0004-018-02.5				
	5	A19/0004-018-05.0				
	25	A19/0004-018-25.0				
20,76	2,5	A19/0004-021-02.5				
	5	A19/0004-021-05.0				
	25	A19/0004-021-25.0				
21,52	2,5	A19/0004-022-02.5				
	5	A19/0004-022-05.0				
	25	A19/0004-022-25.0				

Profile types

	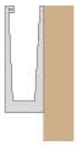	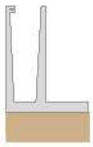	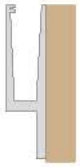
AL/0004-...	AL/0005-...	AL/0006-...	AL/0011-...

Glass t (mm)	L (m)	FIX-SET (pack)	- A19/0004-rubber F-...	+ A19/0004-L	+ A19/0004-plast...	+ A19/0004-rubber...
21,52	2,5	A19/0004-012-02.5				
	5	A19/0004-012-05.0				
	25	A19/0004-012-25.0				
25,52	2,5	A19/0004-017-02.5				
	5	A19/0004-017-05.0				
	25	A19/0004-017-25.0				

	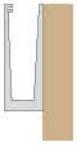		
AL/0008-...	AL/0009-...		

Glass t (mm)	L (m)	FIX-SET (pack)	- A19/0002-rubber F-...	+ A19/0002-L	+ A19/0002-plast..	+ A19/0002-rubber...
12,76	6	A19/0002-013				
16,76		A19/0002-017				
17,52		A19/0002-018				
20,76		A19/0002-021				
21,52		A19/0002-022				

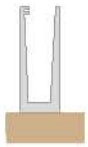	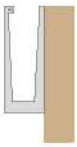	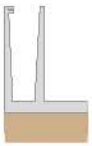	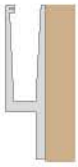
AL/0002-...	AL/0003-...	AL/0010-...	AL/0013-... AL/0015-...

Quality	Finish	art.	L(m)	Glass t	Compatibility	
Rubber	gray	A19/0004-F-G-02.5	2,5	12-21,52	AL/0004 AL/0005	new
		A19/0004-F-G-05.0	5		AL/0006 AL/0008	new
		A19/0004-F-G-25.0	25		AL/0009 AL/0011	new

Interiér/Interior

Quality	Finish	art.	L(m)	Glass t	Compatibility	
Rubber	gray	A19/0004-17-18-G-02.5	2,5	16,76-17,52	AL/0004 AL/0005	new
		A19/0004-17-18-G-05.0	5		AL/0006 AL/0008	new
		A19/0004-17-18-G-25.0	25		AL/0009 AL/0011	new

Interiér/Interior

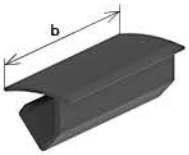

Quality	Finish	art.	b	glass t	compatibility	
PVC	black	A19/0004-D-B	100	12,00-21,52	AL/0004... AL/0005... AL/0006... Al/0008... AL/0009... AL/0011...	new
	gray	A19/0004-D-G				new

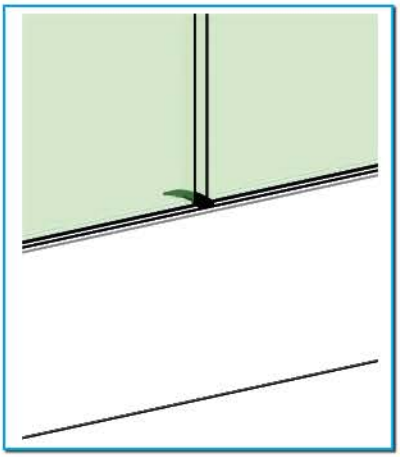

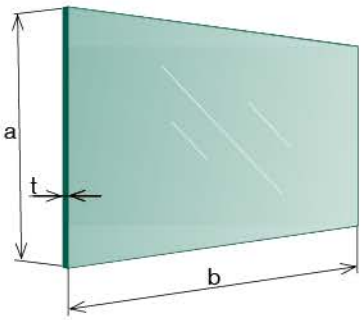

Quality	art.	t	a	b	
VSG/ESG	GS/16,76-100x40-VSG/ESG	16,76	1000	400	
	GS/16,76-100x50-VSG/ESG			500	
	GS/16,76-100x60-VSG/ESG			600	
	GS/16,76-100x70-VSG/ESG			700	
	GS/16,76-100x80-VSG/ESG			800	
	GS/16,76-100x90-VSG/ESG			900	
	GS/16,76-100x95-VSG/ESG			950	
	GS/16,76-100x100-VSG/ESG			1000	
	GS/16,76-120x40-VSG/ESG	16,76	1200	400	
	GS/16,76-120x50-VSG/ESG			500	
	GS/16,76-120x60-VSG/ESG			600	
	GS/16,76-120x70-VSG/ESG			700	
	GS/16,76-120x80-VSG/ESG			800	
	GS/16,76-120x90-VSG/ESG			900	
	GS/16,76-120x95-VSG/ESG			950	
	GS/16,76-120x100-VSG/ESG			1000	
	GS/16,76-120x110-VSG/ESG			1100	new
VSG	GS/16,76-120x110-VSG	16,76	1200	1100	
VSG	GS/16,76-120x110-VSG-orange				
VSG	GS/16,76-120x110-VSG-grey				
VSG	GS/16,76-120x110-VSG-black				

art.
AL/glass-mont

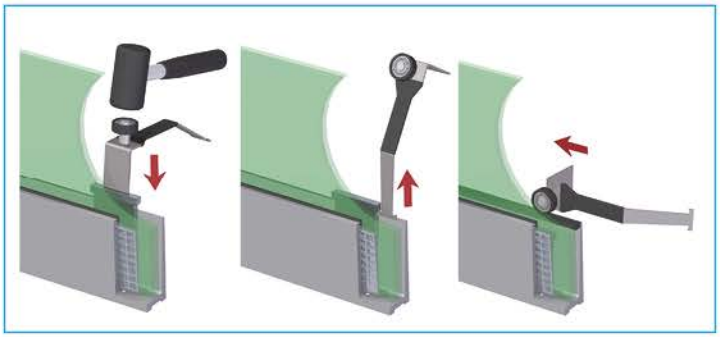

			FIX	FIX	FLEX +	
		L (mm)	Q5/08-FH12-50 Q5/08-FH12-50-B A14/08-FH12-50	Q5/06-12x118CE	A5/08-105x11xM8	Q5/01TK-300
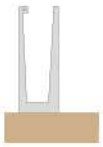	AL/0002-...	6000	40x		40x	
	AL/0004-... AL/0008-...	1250	7x		7x	1x
		2500	13x		13x	1x
		5000	25x		25x	2x
	AL/0012-...	2500		13x		
	AL/0014-...	3000		12x		
	AL/0016-...	6000		24x		
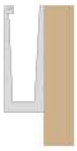	AL/0005-...	1250	5x		5x	1x
		2500	10x		10x	1x
		5000	20x		20x	2x
	AL/0009-...	2500	17x		17x	2x
		5000	33x		33x	3x
	AL/0003-...	6000	24x		24x	2x
	AL/0007-...	6000	40x		40x	3x
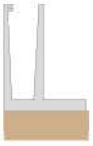	AL/0006-...	2500		13x		
		5000		25x		
	AL/0010-...	6000		24x		
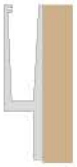	AL/0011-...	1250		7x		
		2500		13x		
		5000		25x		
	AL/0013-...	6000		20x		
	AL/0015-...	6000		30x		

	art.	h	L	glass t	
	AL/ZALVR100-2500-004	1000	2500	16,76 VSG/ESG	new

	art.	h	L	glass t	
	AL/ZALBR100-2500-005	1000	2500	16,76 VSG/ESG	new

	art.	h	L	glass t	
	AL/ZALVR100-2500-006	1000	2500	16,76 VSG/ESG	new

	art.	h	L	glass t	
	AL/ZALBR100-2500-011	1000	2500	16,76 VSG/ESG	new

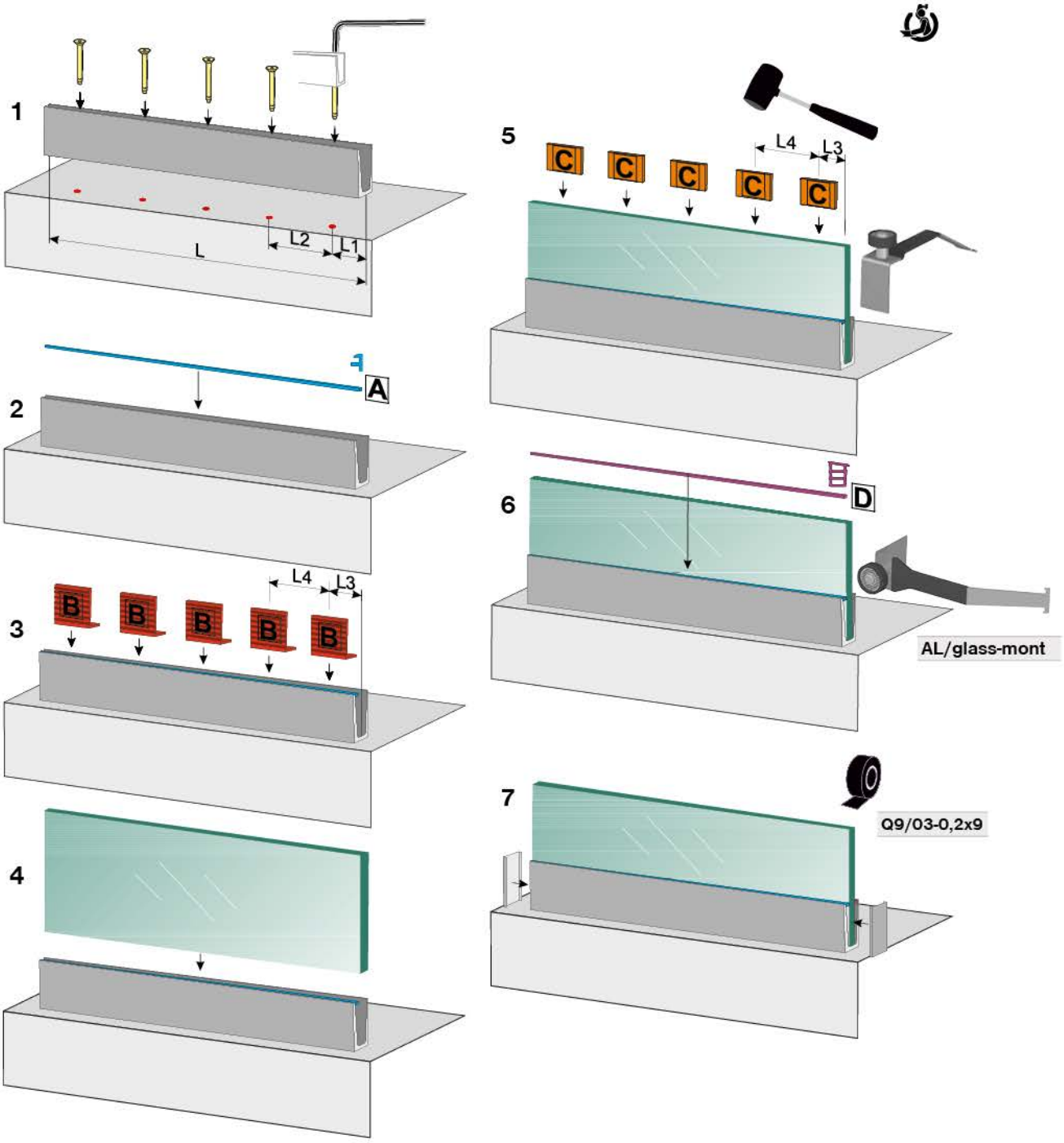

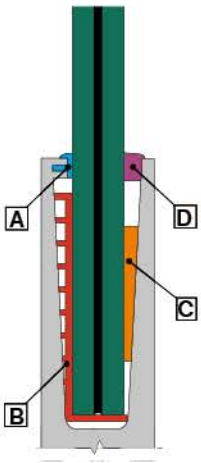

		L	L1	L2	L3	L4
	AL/0004-...	1250	25	200	125	250
		2500	50			
		5000	100			
	AL/0008-...	2500	50			
		5000	100			
	AL/0002-...	6000	75	150	50	
	AL/0006-...	1250	25	200	125	
		2500	50			
		5000	100			
	AL/0010-...	6000	125	250	50	

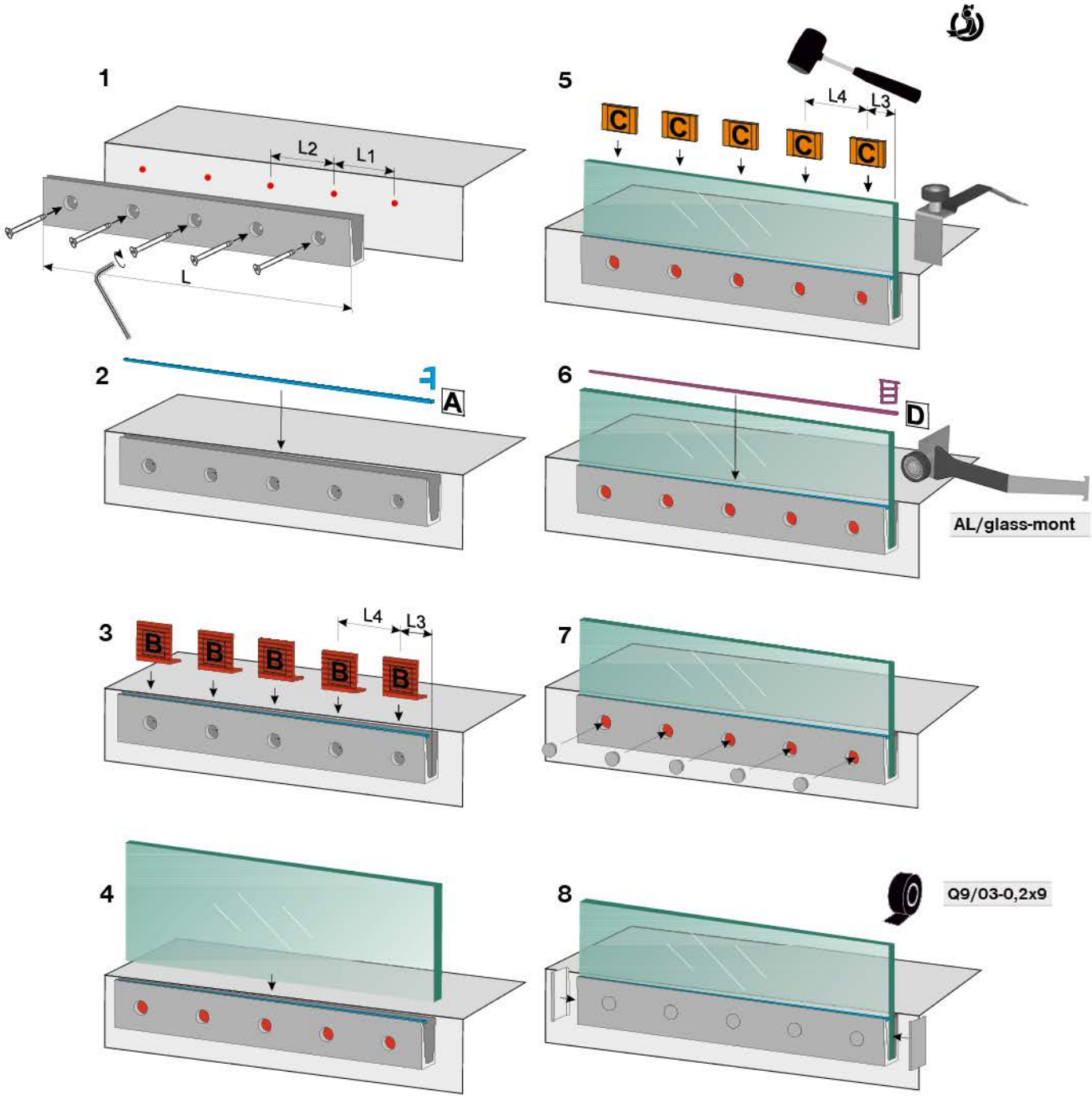

		L	L1	L2	L3	L4
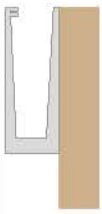	AL/0005-...	1250	125	250	125	250
		2500				
		5000				
	AL/0003-...	6000			50	
	AL/0009-...	2500		150	125	
		5000				
	AL/0007-...	6000	75		50	
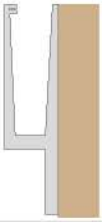	AL/0011-...	1250	25	200	125	250
		2500	50			
		5000	100			
	AL/0013-...	6000	150	300	50	
	AL/0015-...	6000	100	200		

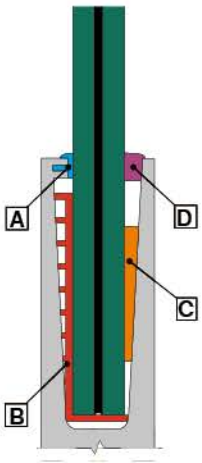

1.2 GLASS ADAPTERS

FLEX MOUNT

FIX MOUNT

SQARE MODELS

DOUBLE ADAPTERS

DOUBLE ADAPTERS

MODEL FLEX

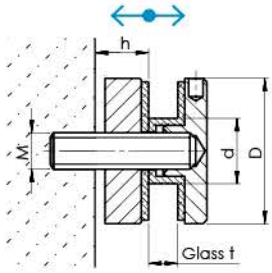

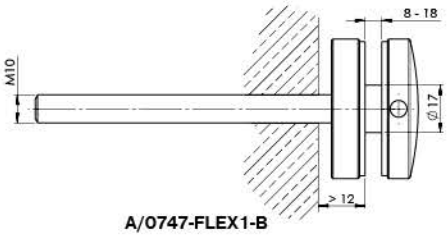

A/0747-FLEX1-B

Quality	Finish	∅	art.	D	h	M	glass t	d	glass hole	
AISI304	satin	flat	A/0746-FLEX1	30	> 12	M8x40	6-12,76	13	15	
			A/0742-FLEX1	40		M10x45	8-17,52	18	20	
			A/0747-FLEX1	50		M10x130		19,5	23	
			A/0747-FLEX1-B					17	20	new

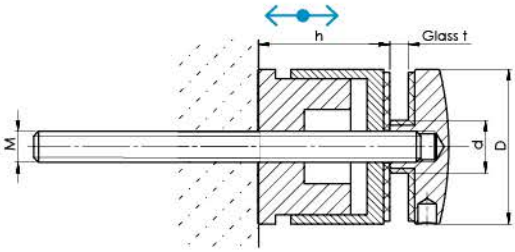

Quality	Finish	∅	art.	D	h	M	glass t	d	glass hole	
AISI304	satin	flat	A/0747-FLEX2	50	35-55	M10x125	8-17,52	17	20	top
AISI316			A14/0747-FLEX2							new

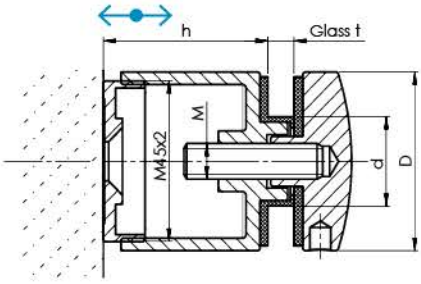

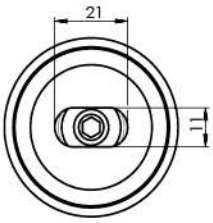

Quality	Finish	∅	art.	D	h	M	glass t	d	glass hole	
AISI304	satin	flat	A/0747-501 FLEX2	50	40-48	M10x40	8-17,52	25	30	top

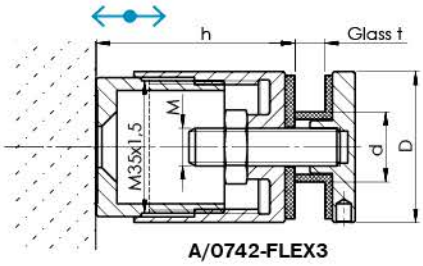

A/0742-FLEX3

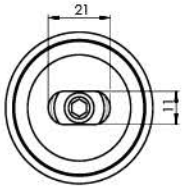

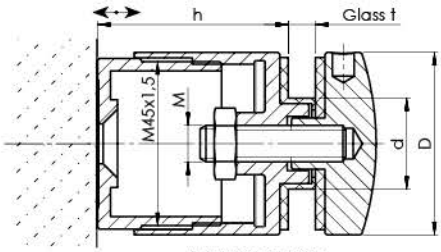

A/0747-FLEX3

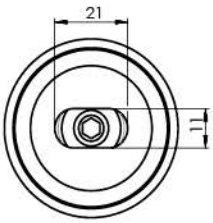

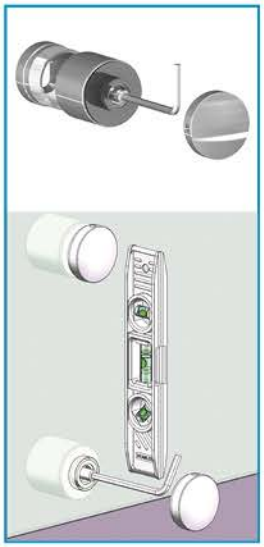

Quality	Finish	∅	art.	D	h	M	glass t	d	glass hole	
AISI304	satin	flat	A/0742-FLEX3	40	40-48	M10x40	8-17,52	18,5	22	new
			A/0747-FLEX3	50				25	30	new

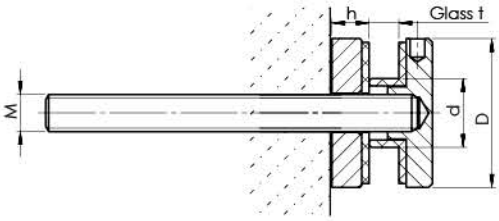

Quality	Finish	∅	art.	D	h	M	glass t	d	glass hole
AISI304	satin	flat	A/0742-000	40	10	M10x100	8-17,52	18,5	20
			A/0747-000-S	50		M8x45		17	
			A/0747-000	50		M10x45			
			A/0749-000	60		M10x100	8-21,52	18,5	
			A/0748-000	70					
	polish		A/0747-000-L	50		M10x45	8-17,52	17	
AISI316	satin		A14/0747-000						
ZAMAK	raw		ZN/0747-000						

top

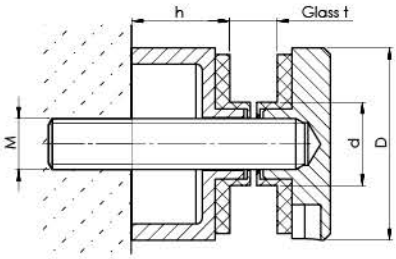

Quality	Finish	∅	art.	D	h	M	glass t	d	glass h
AISI304	satin	flat	A/0746-000	30	15	M8x40	6-12,76	13	15
			A/0746-000-B		17	M8x40			
			A/0746-300		30	M8x80			
			A/0746-400		40	M8x80			
			A/0746-500		50	M8x90			
			A/0747-300	50	30	M10x70	8-17,52	18	20
			A/0747-400		40	M10x90			
			A/0747-500		50	M10x90			
	polish		A/0746-000-L	30	15	M8x40	6-12,76	13	15
AISI316	satin		A14/0746-000		15	M8x40			
			A14/0747-300	50	30	M10x70	8-17,52	18	20
ZAMAK	raw		ZN/0746-000	30	15	M8x40	6-12,76	13	15

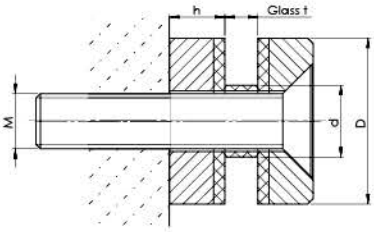

Quality	Finish	∅	art.	D	h	M	glass t	d	glass hole
AISI304	satin	flat	A/0763-000	30	10	M10x50	6-12,76	13	18
			A/0764-000	40			8-17,52		
AISI316			A14/0763-000	30			6-12,76		
			A14/0764-000	40			8-17,52		

MODEL FIX

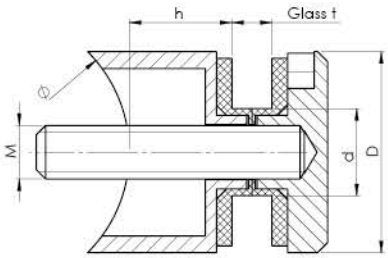

Quality	Finish	∅	art.	D	h	M	glass t	d	glass hole
AISI304	satin	33,7	A/0746-033	30	13	M8x50	6-12,76	13	15
		42,4	A/0746-042		15	M8x40			
			A/0749-042	60	10	M10x125	8-17,52	18,5	20
			A/0748-242	70	10	M10x80	8-17,52	17	20
AISI316			A14/0746-042	30	15	M8x40	6-12,76	13	15

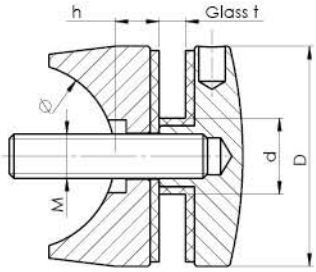

Quality	Finish	∅	art.	D	h	M	glass t	d	glass hole
AISI304	satin	42,4	A/0742-042	40	10	M8x40	8-17,52	18,5	20
			A/0747-242	50		M10x40		17	
AISI316			A14/0747-242						

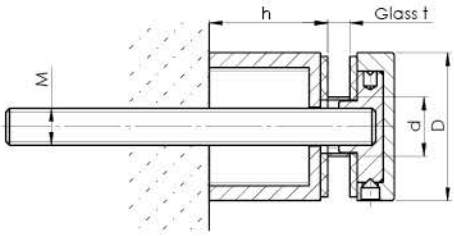

Quality	Finish	∅	art.	D	h	M	glass t	d	glass hole
AISI304	satin	flat	A/0745-300	40	30	M10x100	8-17,52	16	18
			A/0745-500		50				

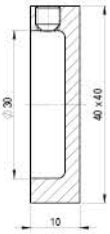

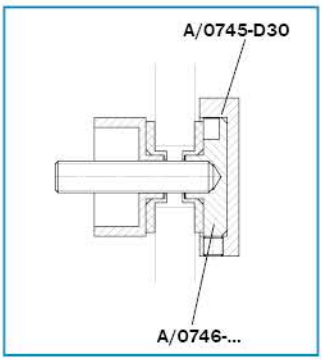

Quality	Finish	art.
AISI304	satin	A/0745-D30

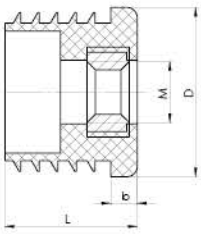

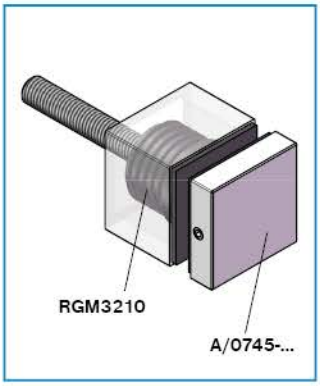

Quality	Finish	art.	D	M	b	L	
PVC	Black	RGM3210	32	10	5	25	new
		RGM4210	42			35	new

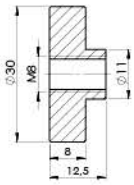

Quality	Finish	art.
AISI304	satin	A/0746-plate

new

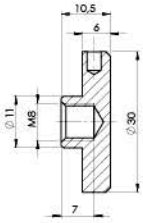

Quality	Finish	art.
AISI304	satin	A/0746-front

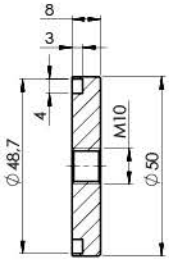

Quality	Finish	art.
AISI304	satin	A/0747-plate

new

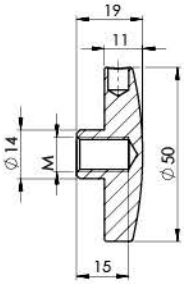

Quality	Finish	art.	M
AISI304	satin	A/0747-front	10
		A/0747-S-front	8

new
new

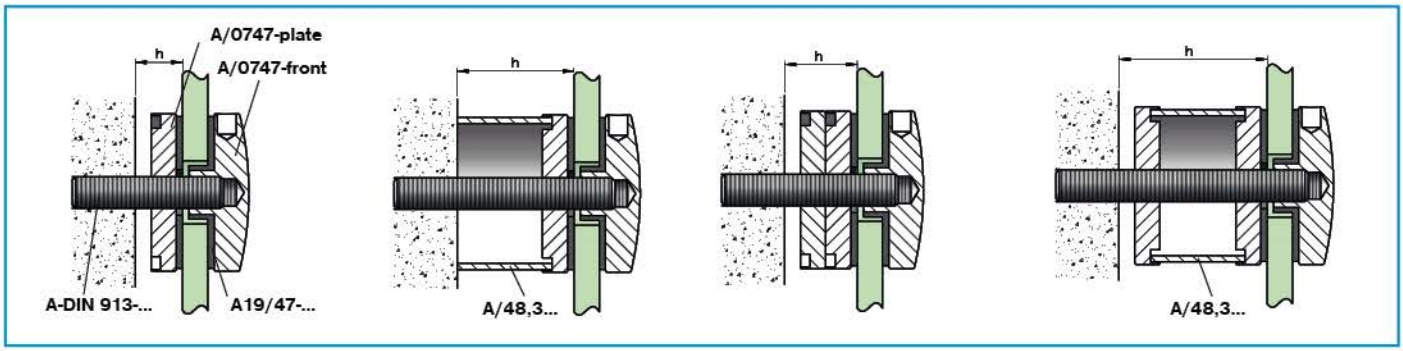

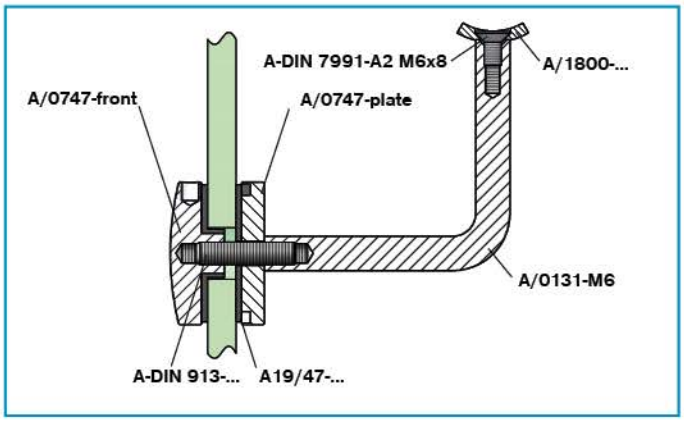

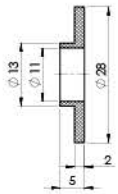

Quality	Finish	art.	Compatibility	
Rubber	black	A19/46-Black	A/0746-...	new
	white	A19/46-White		new

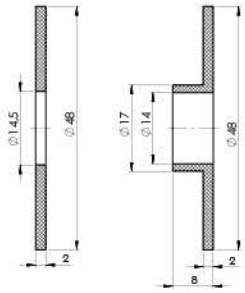

Quality	Finish	art.	Compatibility	
Rubber	black	A19/47-Black	A/0747-...	new
	white	A19/47-White		new

Quality	Finish	art.	M	L	
AISI304	raw	A-DIN 913-A2 M8x22	8	22	new
		A-DIN 913-A2 M8x80		80	new
		A-DIN 913-A2 M10x35	10	35	new
		A-DIN 913-A2 M10x100		100	new

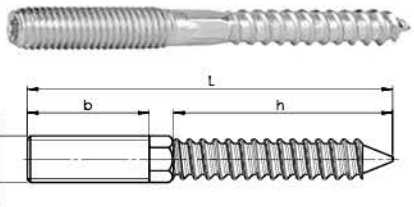

Quality	Finish	art.	M	L	b	h	
AISI304	raw	A-DIN 9210 M8x60-A2	8	60	20	37	new
		A-DIN 9210 M10x100-A2	10	100	30	57	new

Quality	Finish	art.
AISI304	raw	A19/model741-8

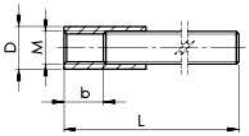

Quality	Finish	art.	M	b	L	h
AISI304	raw	A19/27-M8	8	11	140	15
		A19/27-M10	10	13		

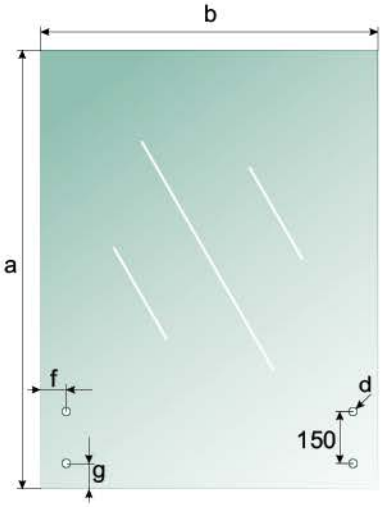

Quality	art.	a	b	d	f	g	glass t	
VSG/ESG	GS/16,76-130x100-VSG/ESG	1300	1000	4x20	75	75	16,76	new
	GS/16,76-98x100-VSG/ESG	980		4x25	92,5	92,5		new
	GS/16,76-133x100-VSG/ESG	1335						new

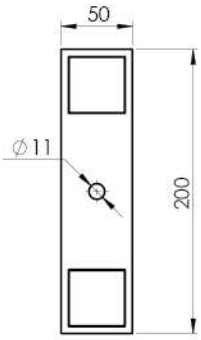

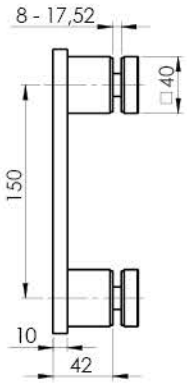

Quality	Finish	art.	Compatibility
AISI304	satin	A/2740-000	GS/16,76-13...

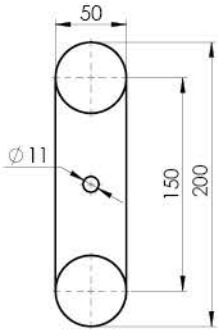

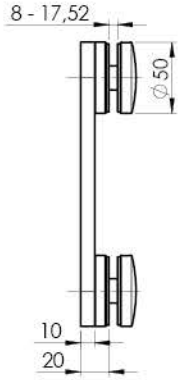

Quality	Finish	art.	Compatibility
AISI304	satin	A/2747-000	GS/16,76-13...

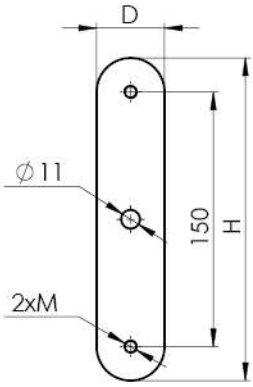

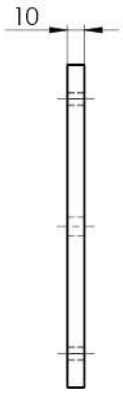

Quality	Finish	art.	D	H
AISI304	satin	A/2746-000 plate T10mm	40	190
		A/2747-000 plate T10mm	50	200

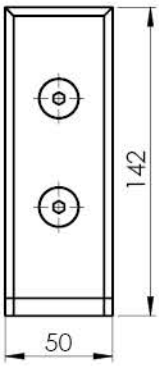

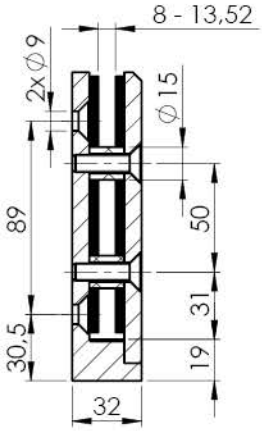

Quality	Finish	art.
AISI316	satin	A14/3000-000

art.	h	L	glass t
GS/FRB6-130x100-16,76-747	1000	1000	16,76 VSG/ESG

new

art.	h	L	glass t
GS/FRB6-130x100-16,7-2747	1000	1000	16,76 VSG/ESG

new

art.	h	L	glass t
GS/FRB6-130x100-16,76-745	1000	1000	16,76 VSG/ESG

new

art.	h	L	glass t
GS/FRB6-130x100-16,7-2740	1000	1000	16,76 VSG/ESG

new

1.3 SPIGOTS

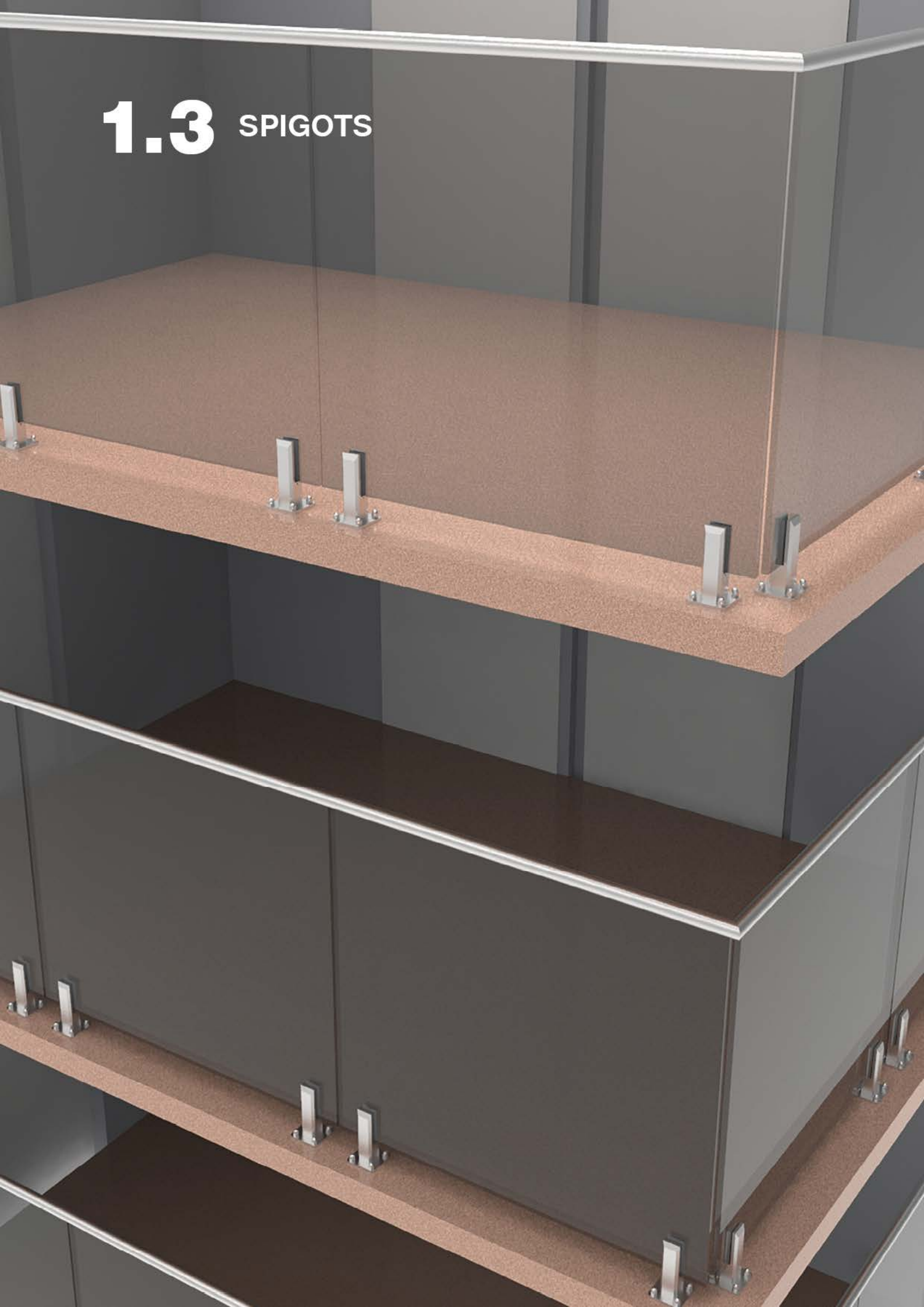

FLEX MODELS

FIX MODELS

SQARE MODELS

ROUND MODELS

POSTS

STATIC STUDIO

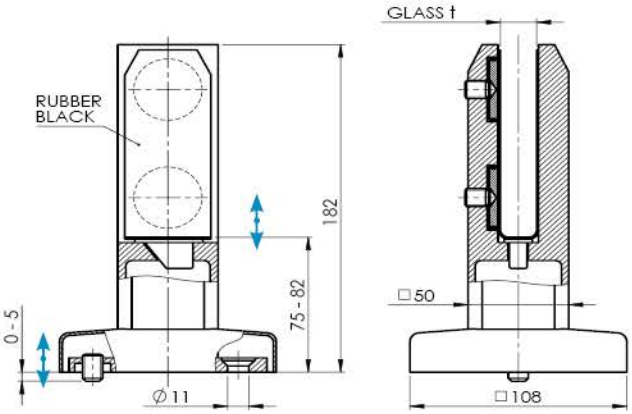

Quality	Finish	art.	G/h	Glass t
AISI316	satin	A14/6210-000	1kN	12-17,52

new

STATIC STUDIO

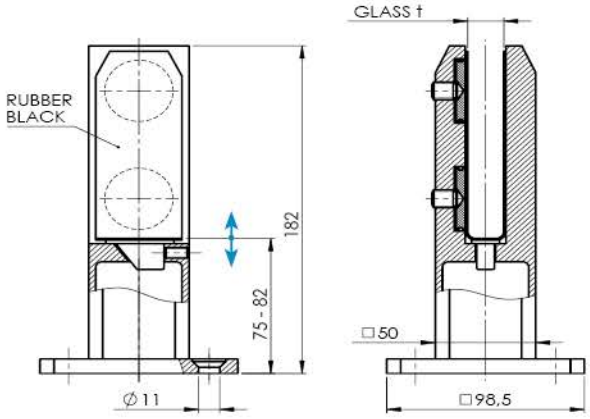

Quality	Finish	art.	G/h	Glass t
AISI304	satin	A/6200-000-C	1kN	12-17,52
AISI316		A14/6200-000-C		
S.S.2205		A22/6200-000-C		

top

STATIC STUDIO

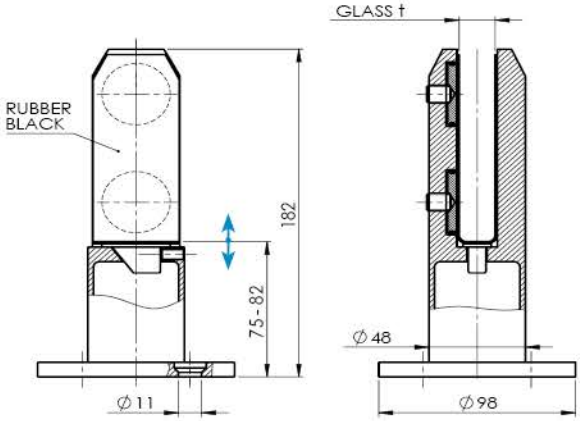

Quality	Finish	art.	G/h	Glass t
AISI304	satin	A/6100-000-B	1kN	12-17,52
AISI316		A14/6100-000-B		

A/6200-000-B

A/6100-000

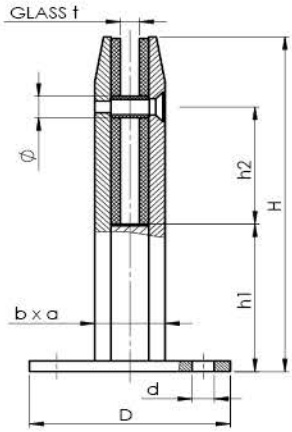

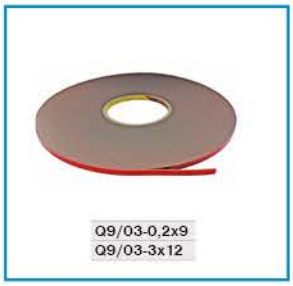

Quality	Finish	art.	H	h1	h2	D	a	b	Ø	d	G/h	Glass t	glass hole	
AISI304	satin	A/6200-000-B	186	81	66	100x100	40	35	12	4x11	1kN	12-17,52	15	new
		A/6100-000	162	61	65	100	49	49	12	3x9				new

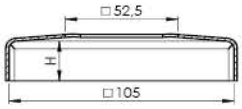

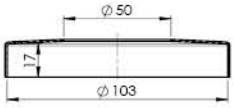

Quality	Finish	art.	H	spigot
AISI304	satin	A/4511-050	20	A/6200-000-C
AISI316		A14/4511-050	22	A14/6200-000-C A22/6200-000-C

Quality	Finish	art.	spigot	
AISI304	satin	A/0512-050	A/6100-...	
AISI316		A14/0512-050	A14/6100-...	new

	art.	h	L	glass t	
	**GS/FRB-103x120-6200**	1030	1200	16,76 VSG/ESG	new

	art.	h	L	glass t	
	**GS/FRB-103x120-6100**	1030	1200	16,76 VSG/ESG	new

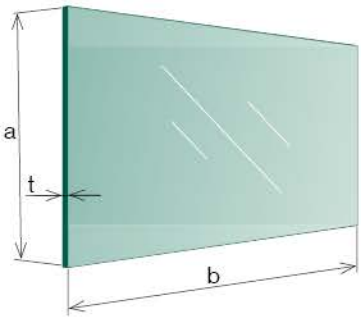

Quality	art.	t	a	b	
VSG/ESG	**GS/16,76-100x40-VSG/ESG**	16,76	1000	400	
	GS/16,76-100x50-VSG/ESG			500	
	GS/16,76-100x60-VSG/ESG			600	
	GS/16,76-100x70-VSG/ESG			700	
	GS/16,76-100x80-VSG/ESG			800	
	GS/16,76-100x90-VSG/ESG			900	
	GS/16,76-100x95-VSG/ESG			950	
	GS/16,76-100x100-VSG/ESG			1000	
	GS/16,76-120x40-VSG/ESG	16,76	1200	400	
	GS/16,76-120x50-VSG/ESG			500	
	GS/16,76-120x60-VSG/ESG			600	
	GS/16,76-120x70-VSG/ESG			700	
	GS/16,76-120x80-VSG/ESG			800	
	GS/16,76-120x90-VSG/ESG			900	
	GS/16,76-120x95-VSG/ESG			950	
	GS/16,76-120x100-VSG/ESG			1000	
	GS/16,76-120x110-VSG/ESG			1100	new
VSG	**GS/16,76-120x110-VSG**	16,76	1200	1100	
VSG	**GS/16,76-120x110-VSG-orange**				
VSG	**GS/16,76-120x110-VSG-grey**				
VSG	**GS/16,76-120x110-VSG-black**				

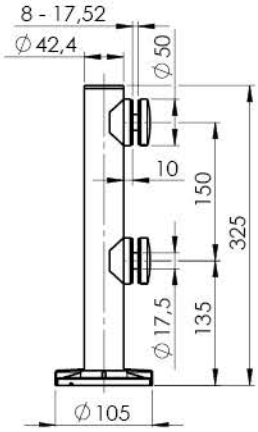

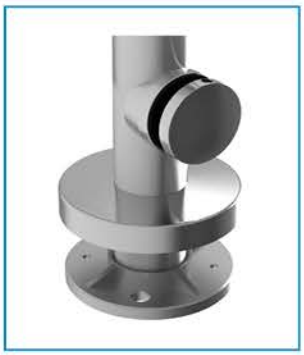

Quality	Finish	art.	Glass	
AISI316	satin	A14/6300-000	GS/16,76-98x100-VSG/ESG	new

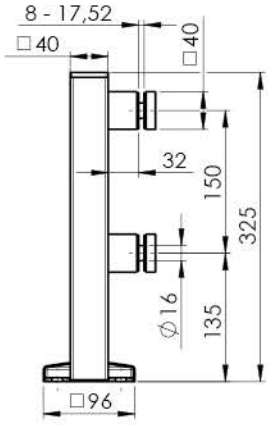

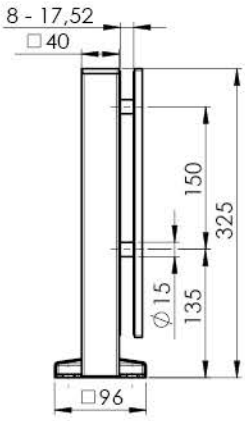

Quality	Finish	art.	Glass	
AISI304	satin	A/6400-040	GS/16,76-98x100-VSG/ESG	new

Quality	Finish	art.	Glass	
AISI304	satin	A/6400-040-plate	GS/16,76-...	new

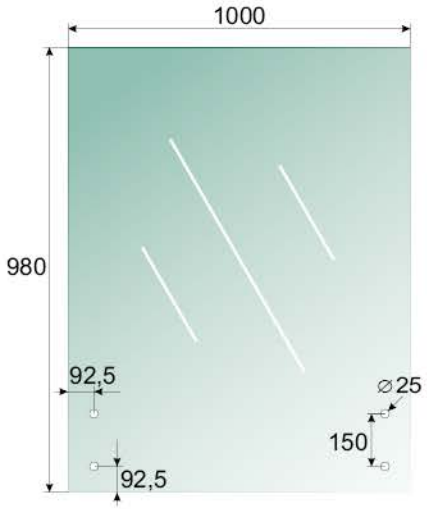

Quality	art.	glass t	
VSG/ESG	GS/16,76-98x100-VSG/ESG	16,76	new

1.4 HANDRAILS

Ø 42
Ø 48
Ø 25,4

80x40

40x40
60x40
25,4x21

18x12
22x9
22x16
26x20
28x26

MODEL 42,4x1,5

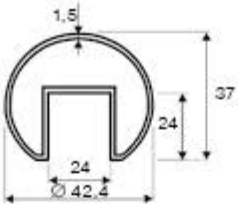

Quality	Finish	art.	L	
AISI304	satin	A/6920-042	5000	
		A/6925-042-1250	1250	
		A/6925-042	2500	✓
AISI316		A14/6920-042	5000	
	polish	A14/6920-042-L	5000	

top

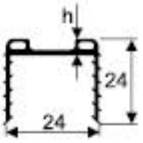

Quality	Finish	art.	Glass t	h	L	
Rubber	black	A19/5042-008	8,0-11,0	5	2500	
		A19/5042-208			5000	
		A19/5042-011	11,5-13,5	4,5	2500	
		A19/5042-211			5000	
		A19/5042-016	16,0-17,5	4,2	2500	
		A19/5042-216			5000	
		A19/5042-022	20,0-21,5		2500	
		A19/5042-222			5000	
Rubber interier	gray	A19/5042-G-016	16,0-17,5		2500	new
		A19/5042-G-216			5000	new

Quality	Finish	art.
AISI304	satin	A/6732-042
AISI316		A14/6732-042

top

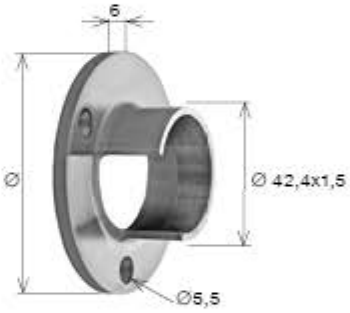

Quality	Finish	art.	Ø
AISI304	satin	A/6505-042	90
AISI316		A14/6505-042	85

Quality	Finish	art.
AISI304	satin	A/6313-042
AISI316		A14/6313-042

Quality	Finish	art.	
AISI304	satin	A/6303-042	new
AISI316		A14/6303-042	

Quality	Finish	art.
AISI304	satin	A/6302-042
AISI316		A14/6302-042

Quality	Finish	art.
AISI304	satin	A/6312-042
AISI316		A14/6312-042

Quality	Finish	art.
AISI304	satin	A/6790-042
AISI316		A14/6790-042

top

Quality	Finish	art.
AISI304	satin	A/6727-042
AISI316		A14/6727-042

new

MODEL 44/AL

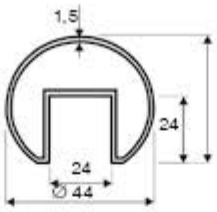

Quality	Finish	art.	L	
ALUMINIUM	satin	AL/6920-044	3000	✓ new
		AL/6925-044	6000	new

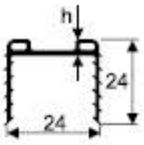

Quality	Finish	art.	Glass t	h	L	
Rubber	black	A19/5042-008	8,0-11,0	5	2500	
		A19/5042-208			5000	
		A19/5042-011	11,5-13,5	4,5	2500	
		A19/5042-211			5000	
		A19/5042-016	16,0-17,5	4,2	2500	
		A19/5042-216			5000	
		A19/5042-022	20,0-21,5		2500	
		A19/5042-222			5000	
Rubber interier	gray	A19/5042-G-016	16,0-17,5		2500	new
		A19/5042-G-216			5000	new

Quality	Finish	art.	
ALUMINIUM	satin	AL/6732-044	new

MODEL 80x40x1,5

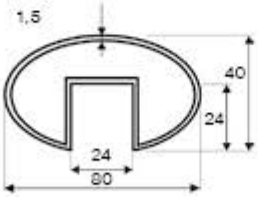

Quality	Finish	art.	L	
AISI304	satin	A/6920-080	5000	✓

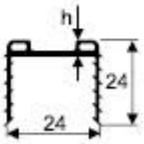

Quality	Finish	art.	Glass t	h	L	
Rubber	black	A19/5042-008	8,0-11,0	5	2500	
		A19/5042-208			5000	
		A19/5042-011	11,5-13,5	4,5	2500	
		A19/5042-211			5000	
		A19/5042-016	16,0-17,5	4,2	2500	
		A19/5042-216			5000	
		A19/5042-022	20,0-21,5		2500	
		A19/5042-222			5000	
Rubber interier	gray	A19/5042-G-016	16,0-17,5		2500	new
		A19/5042-G-216			5000	new

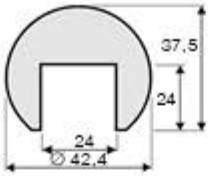

Quality	Finish	art.	glass t	L	
Beech	natural	WB/6925-042	8-21,5	2500	✓ new
Oak		WD/6925-042			new

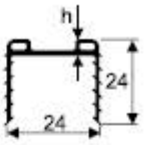

Quality	Finish	art.	Glass t	h	L	
Rubber	black	A19/5042-008	8,0-11,0	5	2500	
		A19/5042-208			5000	
		A19/5042-011	11,5-13,5	4,5	2500	
		A19/5042-211			5000	
		A19/5042-016	16,0-17,5	4,2	2500	
		A19/5042-216			5000	
		A19/5042-022	20,0-21,5		2500	
		A19/5042-222			5000	
Rubber interier	gray	A19/5042-G-016	16,0-17,5		2500	new
		A19/5042-G-216			5000	new

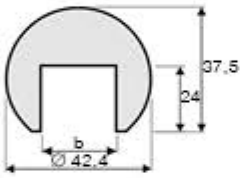

Quality	Finish	art.	b	L	
Beech	natural	WB/6925-042-atyp	9-22	25x00	new
Oak		WD/6925-042-atyp			new

MODEL 48x1,5

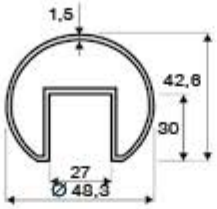

Quality	Finish	art.	L
AISI304	satin	A/6920-048	5000
		A/6925-048	2500
AISI316		A14/6920-048	5000
		A14/6925-048	2500

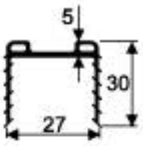

Quality	Finish	art.	Glass t	L
Rubber	black	A19/5048-008	8,0-11,0	2500
		A19/5048-208		5000
		A19/5048-011	11,5-13,5	2500
		A19/5048-211		5000
		A19/5048-015	15,0-17,5	2500
		A19/5048-215		5000
		A19/5048-022	20,0-21,5	2500
		A19/5048-222		5000

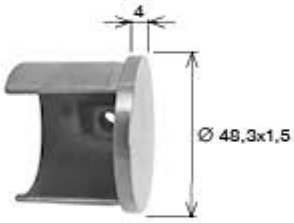

Quality	Finish	art.
AISI304	satin	A/6732-048

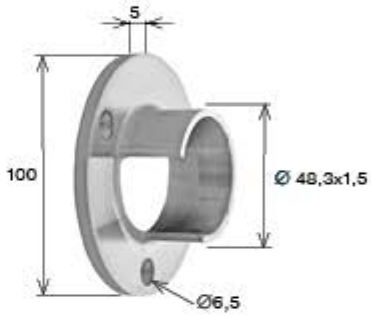

Quality	Finish	art.
AISI304	satin	A/6505-048

Quality	Finish	art.
AISI304	satin	A/6313-048

Quality	Finish	art.
AISI304	satin	A/6790-048

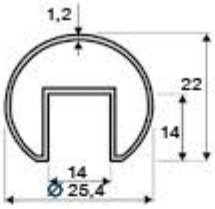

Material	Finish	art.	L	glass t	
AISI316	satin	A14/0925-025	2500	<14	new
		A14/0920-025	5000		new

Material	Finish	art.	
AISI316	satin	A14/0790-025	new

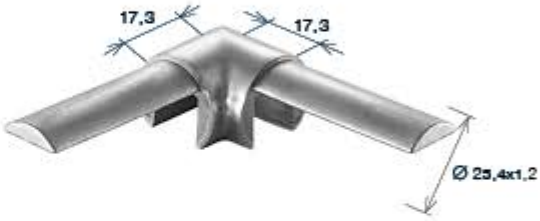

Material	Finish	art.	
AISI316	satin	A14/0313-025	new

Material	Finish	art.	
AISI316	satin	A14/0315-025	new

Material	Finish	art.	
AISI316	satin	A14/0314-025	new

Material	Finish	art.	
AISI316	satin	A14/0505-025	new

Material	Finish	art.	
AISI316	satin	A14/0732-025	new

MODEL 40x40x1,5

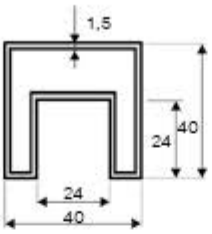

Quality	Finish	art.	L	
AISI304	satin	A/6920-040	5000	
		A/6925-040	2500	✓
AISI316		A14/6920-040	5000	

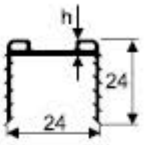

Quality	Finish	art.	Glass t.	h	L	
Rubber	black	A19/5042-008	8,0-11,0	5	2500	
		A19/5042-208			5000	
		A19/5042-011	11,5-13,5	4,5	2500	
		A19/5042-211			5000	
		A19/5042-016	16,0-17,5	4,2	2500	
		A19/5042-216			5000	
		A19/5042-022	20,0-21,5		2500	
		A19/5042-222			5000	
Rubber interier	gray	A19/5042-G-016	16,0-17,5		2500	new
		A19/5042-G-216			5000	new

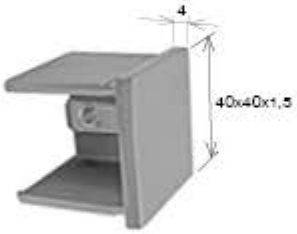

Quality	Finish	art.
AISI304	satin	A/6732-040
AISI316		A14/6732-040

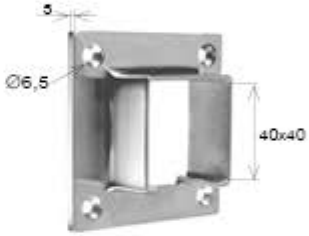

Quality	Finish	art.
AISI304	satin	A/6505-040
AISI316		A14/6505-040

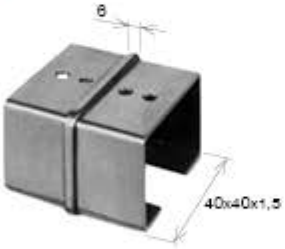

Quality	Finish	art.
AISI304	satin	A/6790-040
AISI316		A14/6790-040

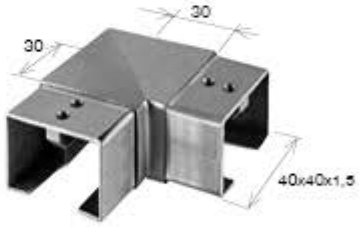

Quality	Finish	art.
AISI304	satin	A/6313-040
AISI316		A14/6313-040

Material	Finish	art.	
AISI316	satin	A14/6302-040	new

Material	Finish	art.	
AISI316	satin	A14/6312-040	new

MODEL 40x40x1,5

Material	Finish	art.	
AISI316	satin	A14/6303-040	new

MODEL 40x40x1,2/AL

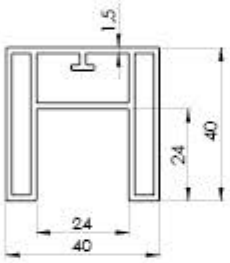

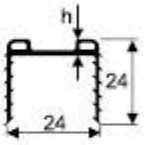

Quality	Finish	art.	L		
ALUMINIUM	satin	AL/6925-040	3000	✓	new
		AL/6920-040	6000		new

Quality	Finish	art.	Glass t	h	L	
Rubber	black	A19/5042-008	8,0-11,0	5	2500	
		A19/5042-208			5000	
		A19/5042-011	11,5-13,5	4,5	2500	
		A19/5042-211			5000	
		A19/5042-016	16,0-17,5	4,2	2500	
		A19/5042-216			5000	
		A19/5042-022	20,0-21,5		2500	
		A19/5042-222			5000	
Rubber interier	gray	A19/5042-G-016	16,0-17,5		2500	new
		A19/5042-G-216			5000	new

MODEL 40x40

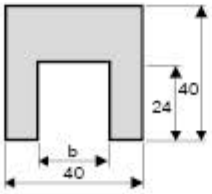

Quality	Finish	art.	b	L	
Beech	natural	WB/6925-040-atyp	9-22	2500	new
Oak		WD/6925-040-atyp			new

MODEL 60x40x1,5

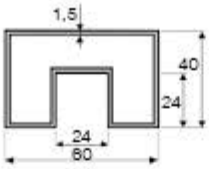

Quality	Finish	art.	L	
AISI304	satin	A/6920-640	5000	
		A/6925-640	2500	✓
AISI316		A14/6920-640	5000	
		A14/6925-640	2500	

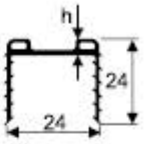

Quality	Finish	art.	Glass t	h	L	
Rubber	black	A19/5042-008	8,0-11,0	5	2500	
		A19/5042-208			5000	
		A19/5042-011	11,5-13,5	4,5	2500	
		A19/5042-211			5000	
		A19/5042-016	16,0-17,5	4,2	2500	
		A19/5042-216			5000	
		A19/5042-022	20,0-21,5		2500	
		A19/5042-222			5000	
Rubber interier	gray	A19/5042-G-016	16,0-17,5		2500	new
		A19/5042-G-216			5000	new

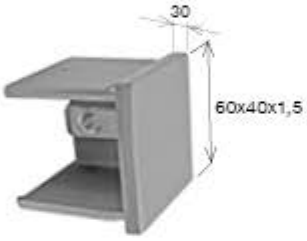

Quality	Finish	art.	
AISI304	satin	A/6732-640	
AISI316		A14/6732-640	new

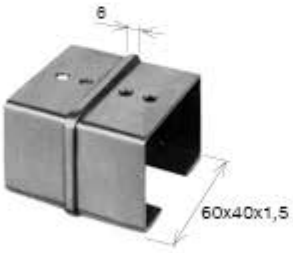

Quality	Finish	art.	
AISI304	satin	A/6790-640	
AISI316		A14/6790-640	new

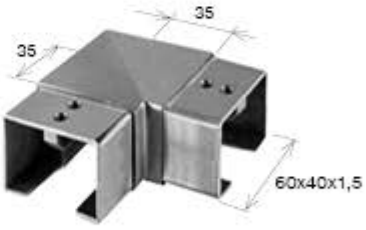

Quality	Finish	art.	
AISI304	satin	A/6313-640	
AISI316		A14/6313-640	new

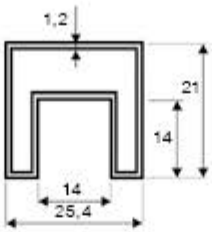

Material	Finish	art.	L	glass t	
AISI316	satin	A14/6925-225	2500	<14	new
		A14/6920-225	5000		new

Material	Finish	art.	
AISI316	satin	A14/6790-225	new

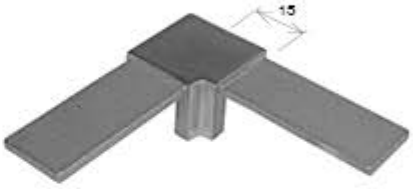

Material	Finish	art.	
AISI316	satin	A14/6312-225	new

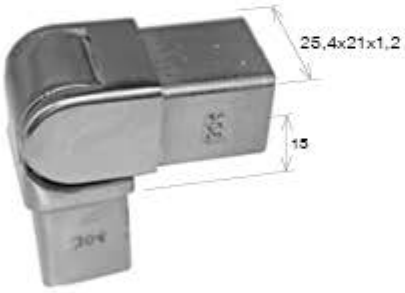

Material	Finish	art.	
AISI316	satin	A14/6315-225	new

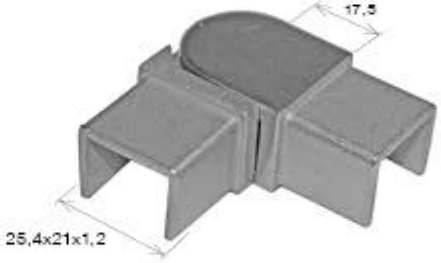

Material	Finish	art.	
AISI316	satin	A14/6314-225	new

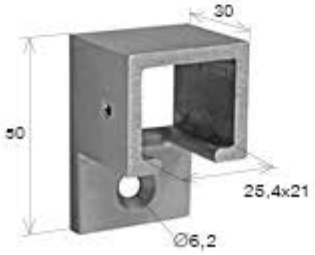

Material	Finish	art.	
AISI316	satin	A14/6505-225	new

Material	Finish	art.	
AISI316	satin	A14/6732-225	new

MODEL 18x12x2

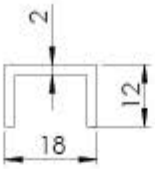

Material	Finish	Effect	art.	L	glass t
ALUMINIUM	satin	ELOX	AL/6901-014-3000-S-E	3000	< 14
			AL/6901-014-6000-S-E	6000	
	natural	Black	AL/6901-014-6000-N-B		

new

Q9/03-3x12

Q5/05TR-310

MODEL 22x9x2

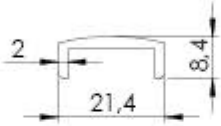

Material	Finish	Effect	art.	L	glass t
ALUMINIUM	satin	ELOX	AL/6901-017-3000-S-E	3000	< 17
			AL/6901-017-6000-S-E	6000	

new

new

Q9/03-3x12

Q5/05TR-310

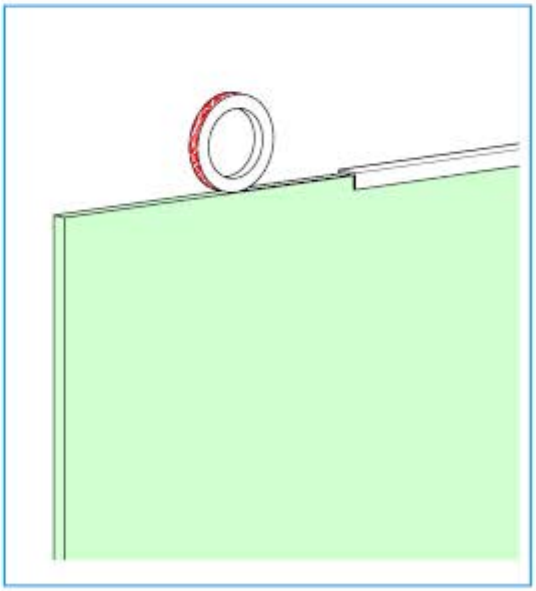

MODEL 22x16x2

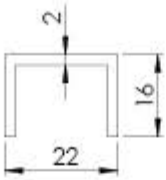

Material	Finish	Effect	art.	L	glass t	
AISI304	satin		A/6901-018-2500	2500	<18	
			A/6901-018-5000	5000		new
ALUMINIUM		ELOX	AL/6901-018-3000-S-E	3000		top
			AL/6901-018-6000-S-E	6000	< 18	
	natural	black	AL/6901-018-6000-N-B			new

MODEL 26x20x2

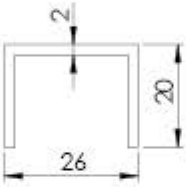

Material	Finish	Effect	art.	L	glass t	
ALUMINIUM	satin	ELOX	AL/6901-022-3000-S-E	3000		
			AL/6901-022-6000-S-E	6000	< 22	
	natural	black	AL/6901-022-6000-N-B			new

MODEL 28x26x2

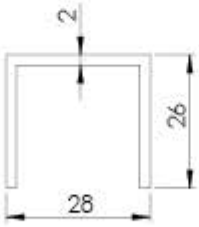

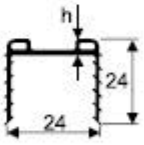

Quality	Finish	art.	L	glass t	LED	
AISI304	satin	A/6900-020	2500			
		A/6905-020	5000	< 24	✓	new
ALUMINIUM		AL/6900-020	3000			new
		AL/6905-020	6000			new

Quality	Finish	art.	Glass t	h	L	
Rubber	black	A19/5042-008	8,0-11,0	5	2500	
		A19/5042-208			5000	
		A19/5042-011	11,5-13,5	4,5	2500	
		A19/5042-211			5000	
		A19/5042-016	16,0-17,5	4,2	2500	
		A19/5042-216			5000	
		A19/5042-022	20,0-21,5		2500	
		A19/5042-222			5000	
Rubber interier	gray	A19/5042-G-016	16,0-17,5		2500	new
		A19/5042-G-216			5000	new

1.5 CONNECTORS

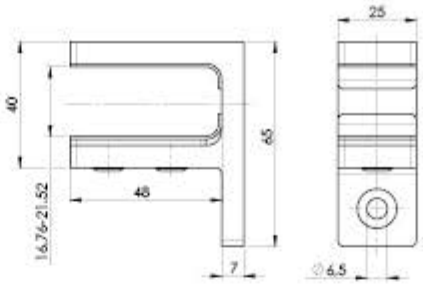

Quality	Finish	art.	glass t
AISI316	satin	A14/0771-000	16,76 - 21,52

new

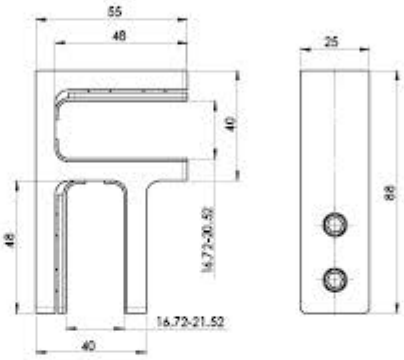

Quality	Finish	art.	glass t
AISI316	satin	A14/0773-000	16,76 - 21,52

new

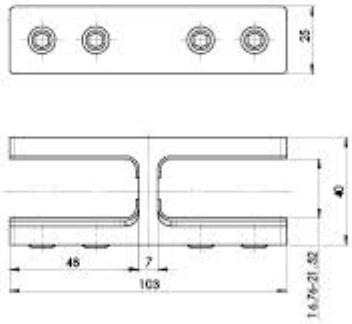

Quality	Finish	art.	glass t
AISI316	satin	A14/0772-000	16,76 - 21,52

new

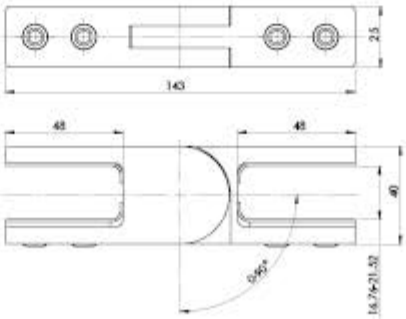

Quality	Finish	art.	glass t
AISI316	satin	A14/0774-000	16,76 - 21,52

new

MODEL 230P

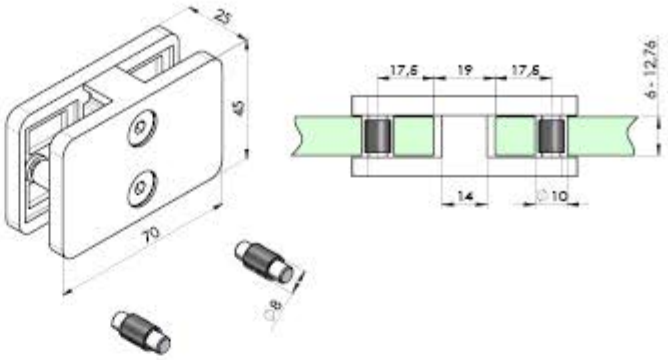

Quality	Finish	art.		A19/04-PVC
AISI316	satin	A14/230P-700	1x	

	glass t					
	6	6,76	8	8,76	10	10,76
	A19/23-P06	A19/23-P07	A19/23-P08	A19/23-P09	A19/23-P10	A19/23-P11

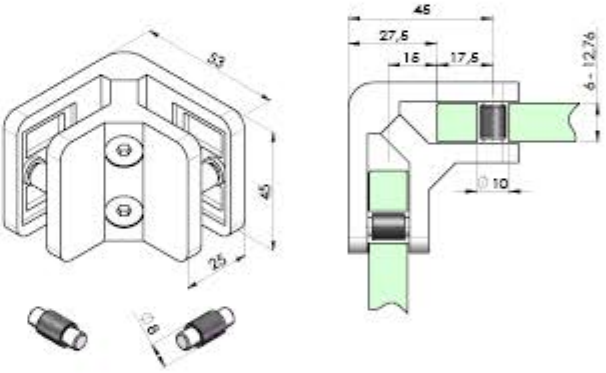

Quality	Finish	art.		A19/04-PVC
AISI316	satin	A14/230P-900	1x	

	glass t					
	6	6,76	8	8,76	10	10,76
	A19/23-P06	A19/23-P07	A19/23-P08	A19/23-P09	A19/23-P10	A19/23-P11

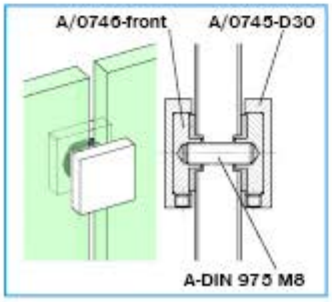

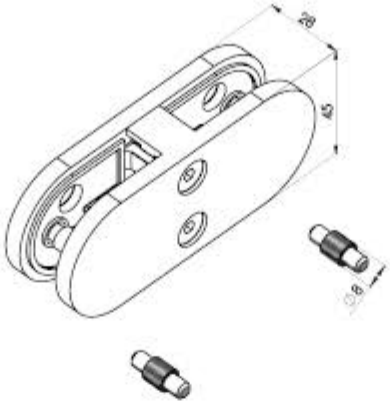

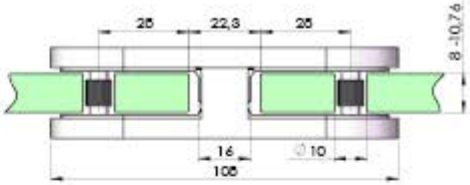

Quality	Finish	art.		
AISI316	satin	A14/2200-700	1x	A19/04-PVC

	plate t			glass t			
	1,5	2	3	8	8,76	10	10,76
	A19/22-0015	A19/22-002	A19/22-003	A19/22-008	A19/22-009	A19/22-010	A19/22-011

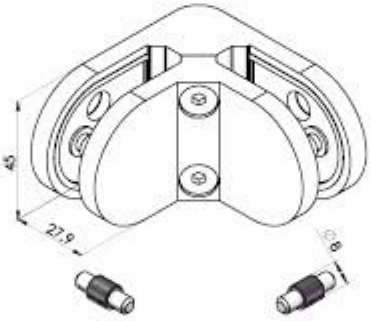

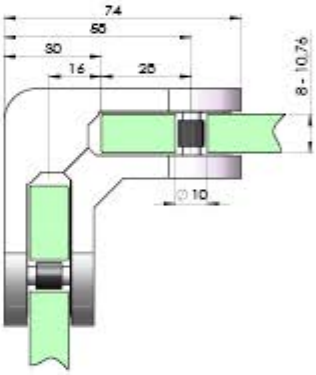

Quality	Finish	art.		
AISI316	satin	A14/2200-900-B	1x	A19/04-PVC

	plate t			glass t			
	1,5	2	3	8	8,76	10	10,76
	A19/22-0015	A19/22-002	A19/22-003	A19/22-008	A19/22-009	A19/22-010	A19/22-011

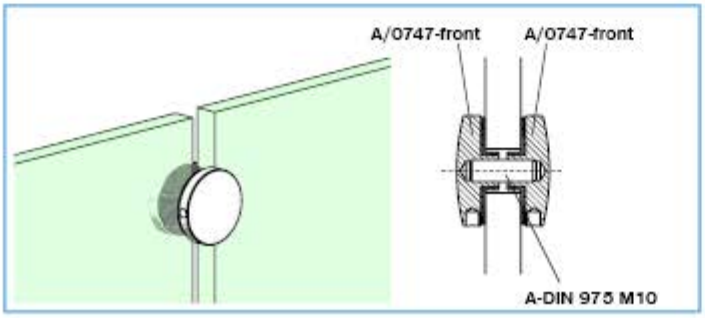

2 POST RAILING

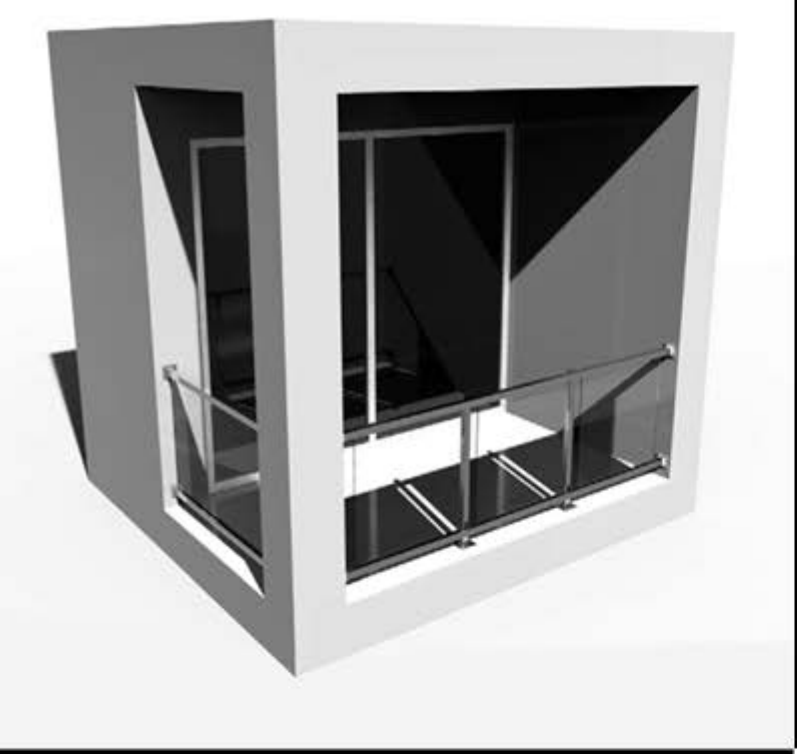

2.4 FRENCH BALCONIES

94

2.4 FRENCH BALCONIES

96

umakov®
PRODUCT/SYSTEM/DESIGN

2.1 GLASS RAILING

MODEL **22/900-D42**

GR GL

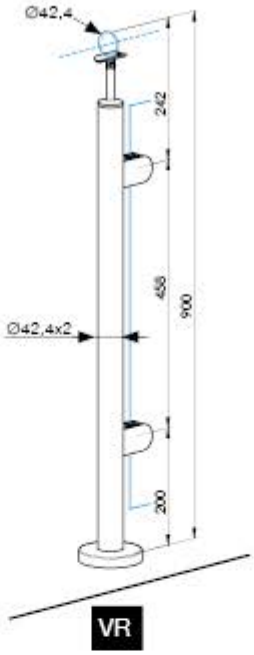

Quality	Finish	glass t	art.
AISI304	satin	8,76	A-VR90-2GR
			A-VR90-2GL

4G

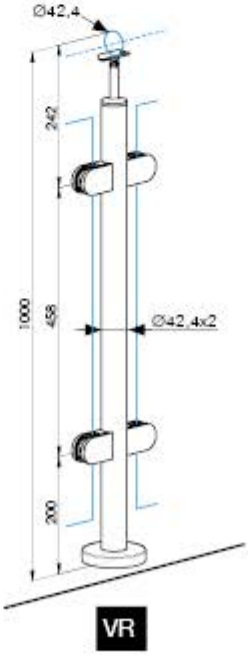

Quality	Finish	glass t	art.
AISI304	satin	8,76	A-VR90-4G
			A-VR90-4G90

MODEL 22/1000-D42

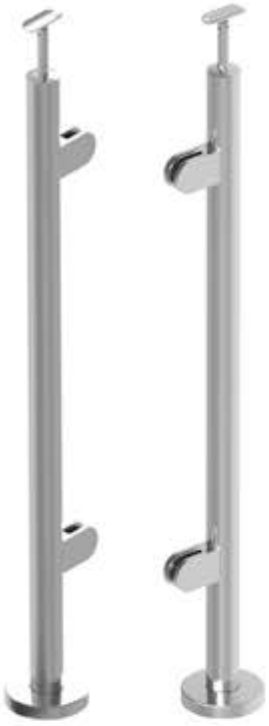

GR GL

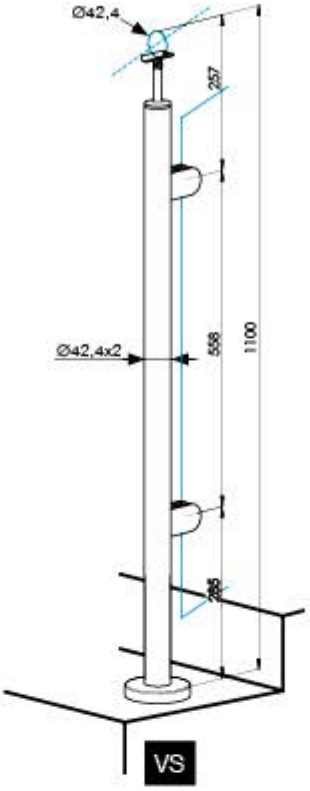

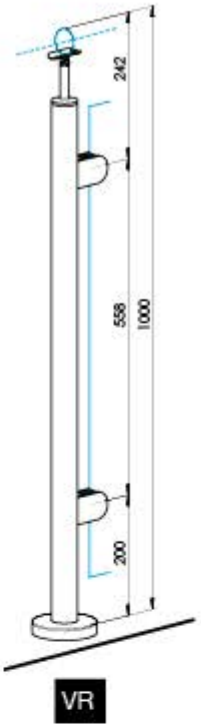

Quality	Finish	glass t	art.
AISI304	satin	8,76	A-VR100-2GR
			A-VS100-2GR
			A-VR100-2GL
			A-VS100-2GL

4G

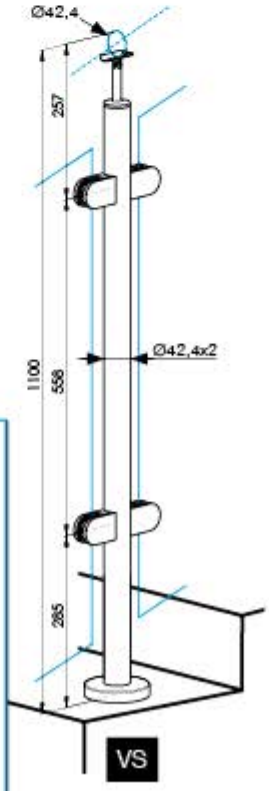

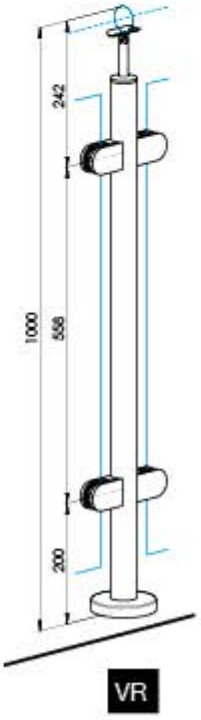

Quality	Finish	glass t	art.
AISI304	satin	8,76	A-VR100-4G
			A-VR100-4G90
			A-VS100-4G

MODEL 22/1000-D42

GR GL

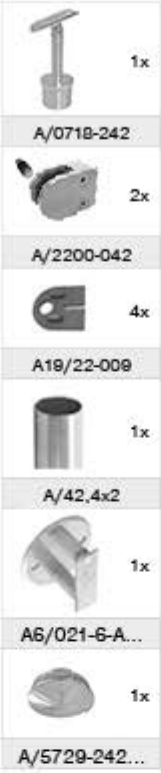

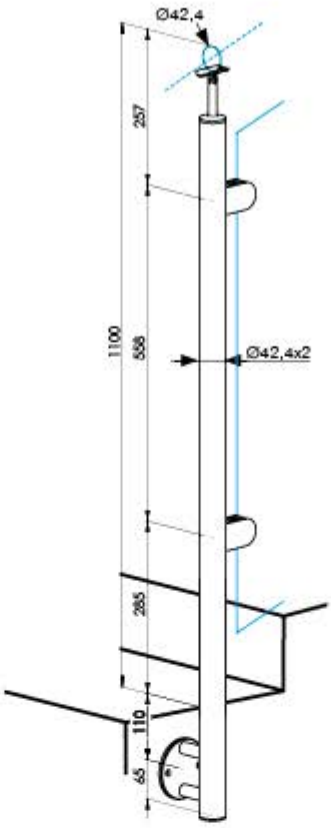

BS

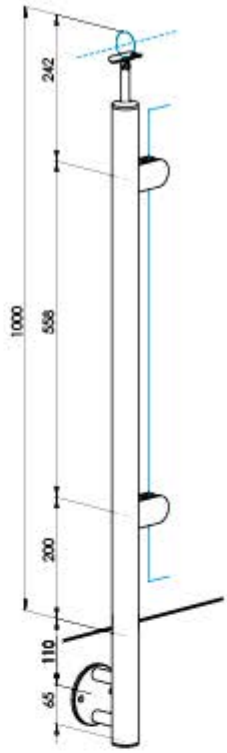

BR

Quality	Finish	glass t	art.
AISI304	satin	8,76	A-BR100-2GR
			A-BS100-2GR

MODEL 22/1000-D42

4G

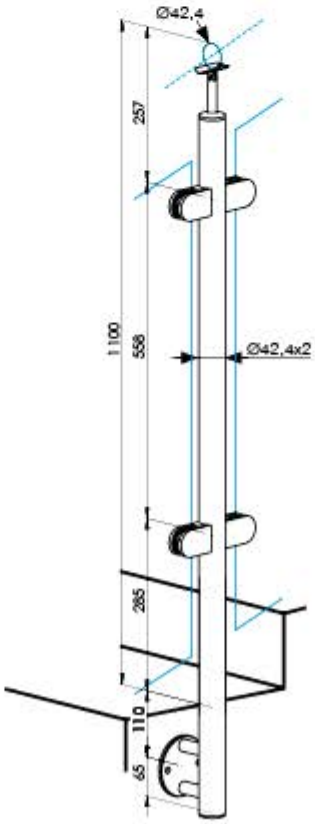

BS

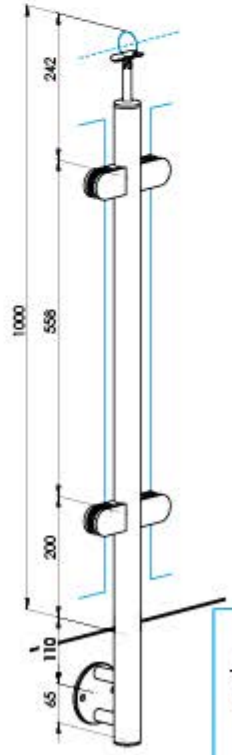

BR

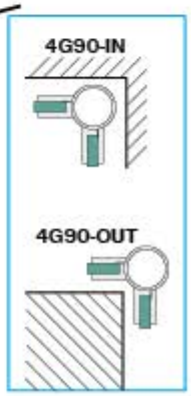

Quality	Finish	glass t	art.
AISI304	satin	8,76	A-BR100-4G
			A-BS100-4G
			A-BR100-4G90-IN
			A-BR100-4G90-OUT

MODEL 250P/1000-D42

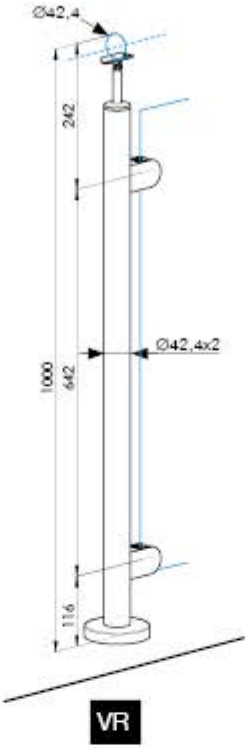

Quality	Finish	glass t	art.
AISI304	satin	8,76	A-VR100-2G-250P

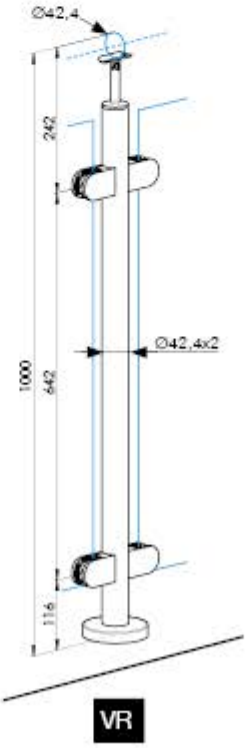

Quality	Finish	glass t	art.
AISI304	satin	8,76	A-VR100-4G-250P
			A-VR100-4G90-250P

MODEL **250P/1000-D42**

GR GL

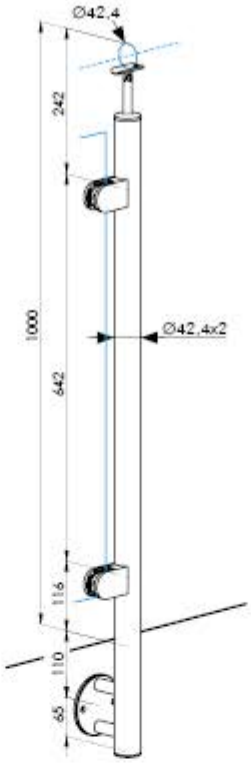

BR

Quality	Finish	glass t	art.
AISI304	satin	8,76	A-BR100-2GR-250P
			A-BR100-2GL-250P

4G

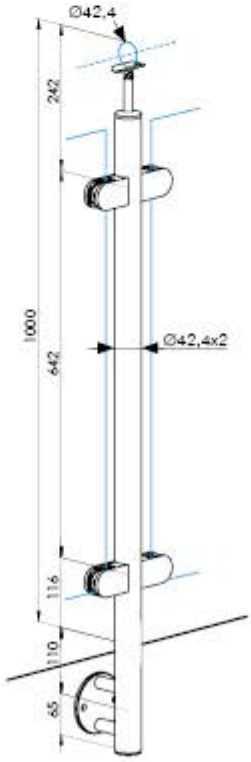

BR

Quality	Finish	glass t	art.
AISI304	satin	8,76	A-BR100-4G-250P

MODEL 22/1100-D42

GR GL

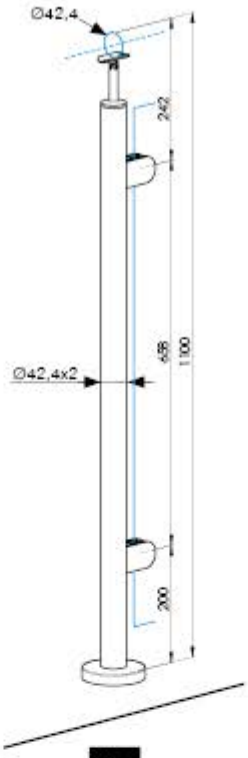

VR

Quality	Finish	glass t	art.
AISI304	satin	8,76	A-VR110-2GR
			A-VR110-2GL

4G

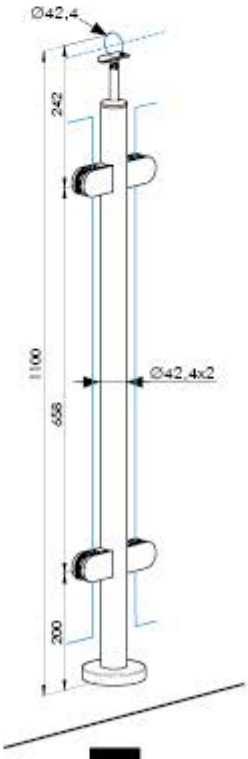

VR

Quality	Finish	glass t	art.
AISI304	satin	8,76	A-VR110-4G
			A-VR110-4G90

MODEL 22/1000-40x40

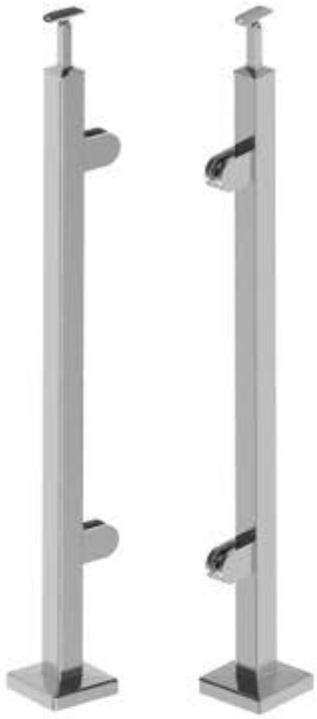

GR GL

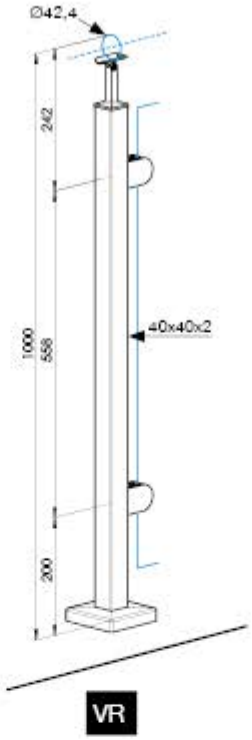

Quality	Finish	glass t	art.
AISI304	satin	8,76	AJP-VR100-2GR
			AJP-VR100-2GL

4G

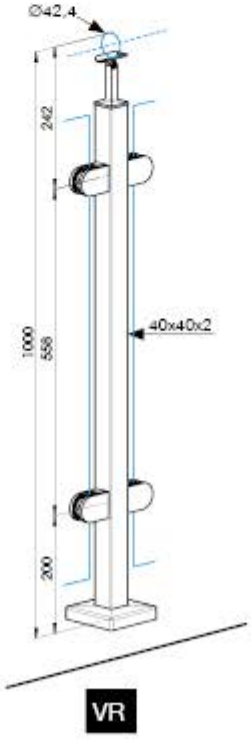

Quality	Finish	glass t	art.
AISI304	satin	8,76	AJP-VR100-4G

MODEL ATYP-SET

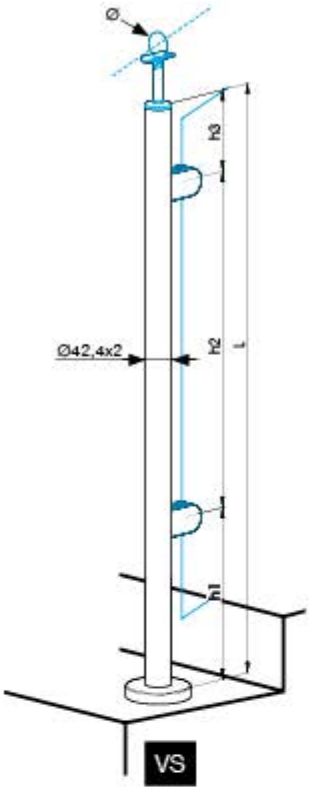

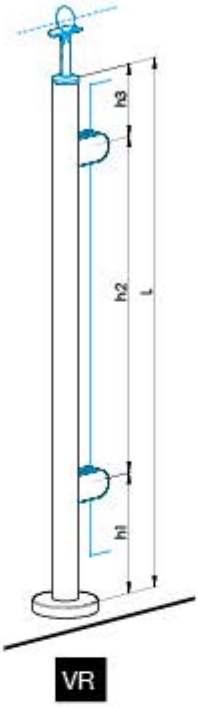

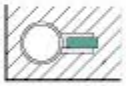
2GR

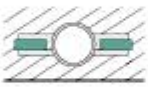
4G

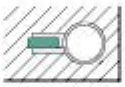
2GL

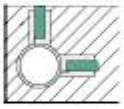
4G90-OUT

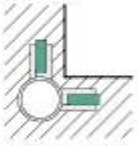
4G90-IN

Quality	Finish	artL	L	h1	h2	h3	2GR	2GL	4G	4G90-IN	4G90-OUT	Pcs
AISI304	satin	ATYP-SET-VR90-2G	900		458							
		ATYP-SET-VR100-2G		200		242				-	-	
		ATYP-SET-VR100-4G90	1000		558		-	-	-			
		ATYP-SET-VS100-2G		285		257						
		ATYP-SET-VR110-2G	1100	200	658	242						

MODEL **ATYP-SET**

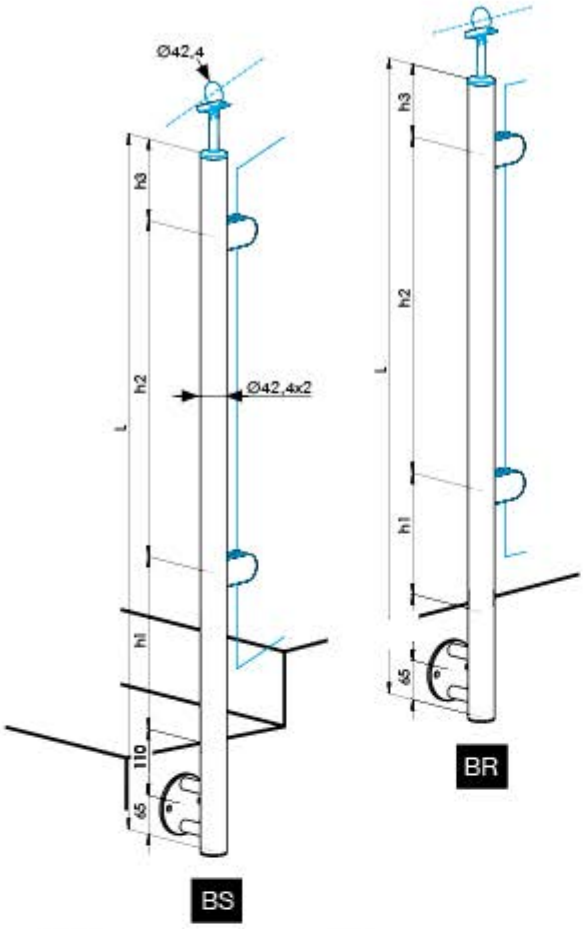

2GR

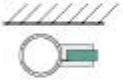

4G

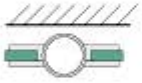

2GL

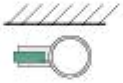

Quality	Finish	art.	L	h1	h2	h3	h4	h5	2GR	2GL	4G	4G90-IN	4G90-OUT	Pcs
AISI304	satin	**ATYP-SET-BS90/BR100-0G**	1000	200	558	242	110	65				-	-	
		ATYP-SET-BS100/BR110-0G		285		257								

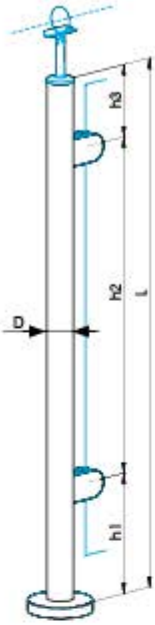

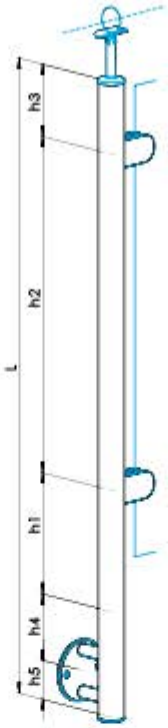

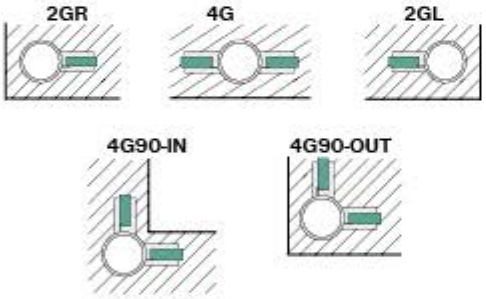

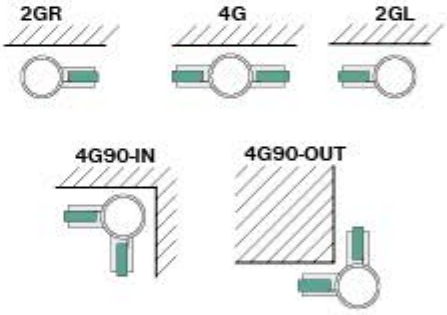

Quality	Finish	D	art.	L	h1	h2	h3	2GR	2GL	4G	4G90-IN	4G90-OUT	Pcs
AISI304	satin	42,4x2	ATYP-INOX A/42,4										
			ATYP-INOX A/42,4-L										
AISI316			ATYP-INOX A14/42,4										
AISI304		40x40	ATYP-INOX A/40x40										
AISI316			ATYP-INOX A14/40x40										
Beech	natural		ATYP-INOX WB/40x40										
		50	ATYP-INOX WB/D50										
Oak		40x40	ATYP-INOX WD/40x40										
		50	ATYP-INOX WD/D50										

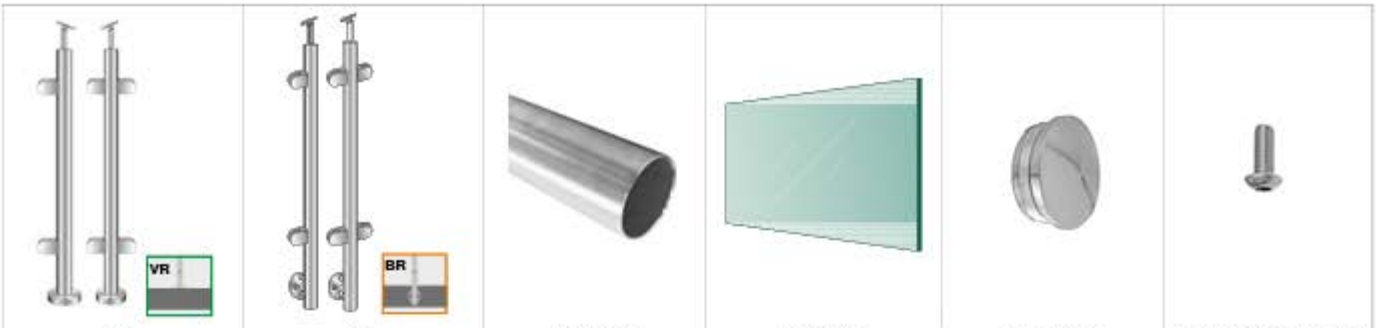

VR	BR	A/42,4x2	GS/8,76	A/5729-242	A-DIN 7380-A2 M5x12

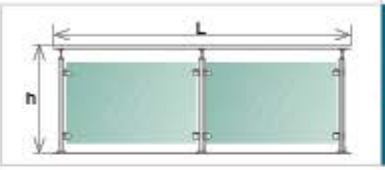

Quality	Finish	Ø	art.	L	b	GS/8,76...	VR
AISI304	satin	42,4x2	A/ZGVR100-1504	1500	1000	1x	2x
			A/ZGVR100-2786	3000		2x	3x
			A/ZGVR100-5350	6000		4x	5x

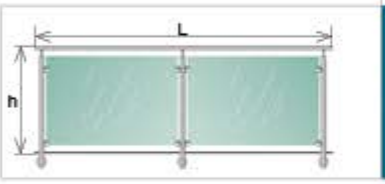

Quality	Finish	Ø	art.	L	b	GS/8,76...	BR
AISI304	satin	42,4x2	A/ZGBR100-1504	1500	1000	1x	2x
			A/ZGBR100-2786	3000		2x	3x
			A/ZGBR100-5350	6000		4x	5x


Q/INOX-INSTALL-SET

not assembled

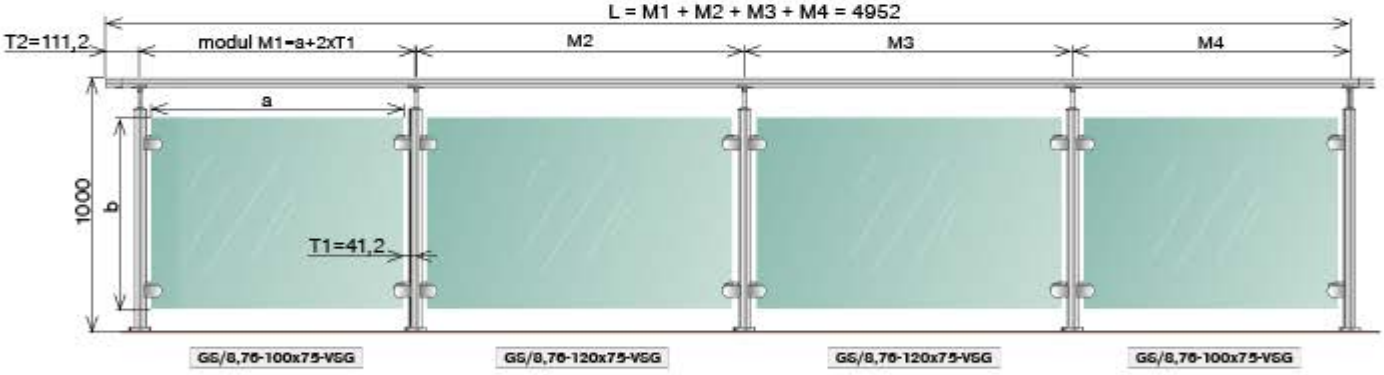

Quality	art.	a	b	glass t	
VSG	GS/8,76-30x75-VSG	300	750	8,76	
VSG	GS/8,76-70x75-VSG	700			
VSG	GS/8,76-80x75-VSG	800			
VSG	GS/8,76-90x75-VSG	900			top
VSG	GS/8,76-100x75-VSG	1000			
VSG	GS/8,76-110x75-VSG	1100			
VSG	GS/8,76-120x75-VSG	1200			top
VSG	GS/8,76-120x75-VSG-MILK	1200			
VSG/ESG	GS/8,76-70x75-VSG/ESG	700			new
VSG/ESG	GS/8,76-80x75-VSG/ESG	800			new
VSG/ESG	GS/8,76-90x75-VSG/ESG	900			new
VSG/ESG	GS/8,76-100x75-VSG/ESG	1000			new
VSG/ESG	GS/10,76-110x75-VSG/ESG	1100		10,76	new
VSG/ESG	GS/10,76-120x75-VSG/ESG	1200			new
VSG/ESG	GS/10,76-120x75-VSG/ESG-MILK				new

a	2xT1	Modul M M=a+2xT1	2xT2	L=M+2xT2
300	82,4	382,4	222,4	604,8
700		782,4		1004,8
800		882,4		1104,8
900		982,4		1204,8
1000		1082,4		1304,8
1100		1182,4		1404,8
1200		1282,4		1504,8

2.2 HORIZONTAL RAILING


1x
A/0710-242...


4x
A/0830-042...


1x
A/42,4x2...


1x
A/0512-042...


1x
A/0940-042-N

Quality	Finish	art.
AISI304	satin	A-VR90-4D12
		A-VS90-4D12
	polish	A-VR90-4D12-L
		A-VS90-4D12-L

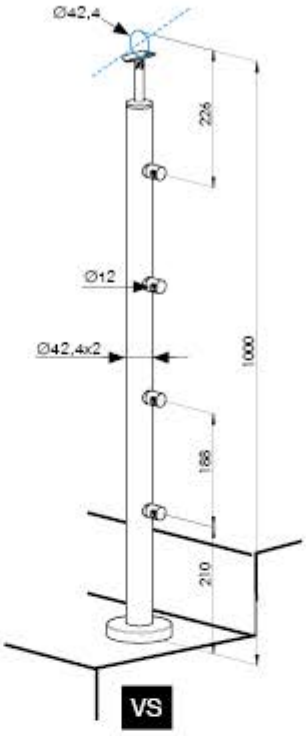

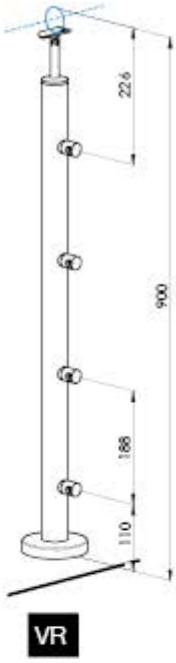


1x
A/0710-242...


4x
A/0830-042...


1x
A/42,4x2...


1x
A6/021-6-A...


1x
A/5729-242...

Quality	Finish	art.
AISI304	satin	A-BR90-4D12
		A-BS90-4D12
	polish	A-BR90-4D12-L
		A-BS90-4D12-L

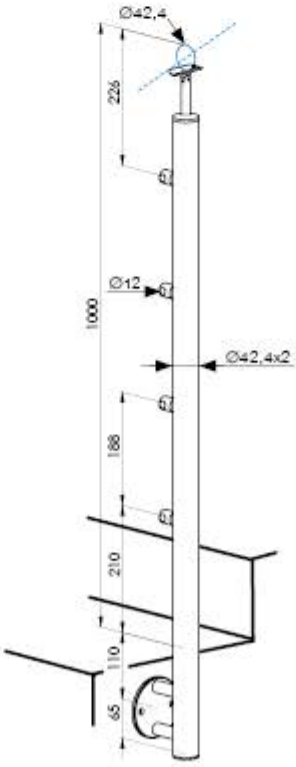

MODEL d12/900-D50

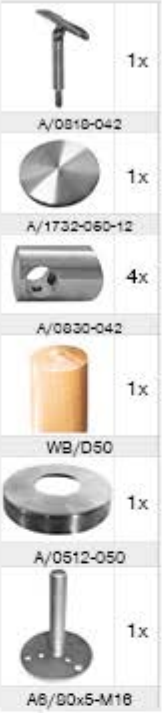

Quality	Finish	art.
Beech	natural	WB-VR90-4D12
		WB-VS90-4D12

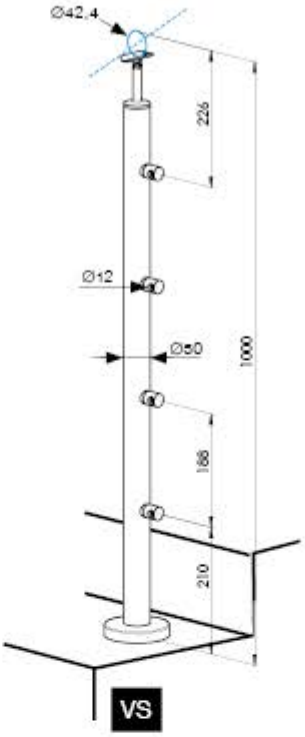

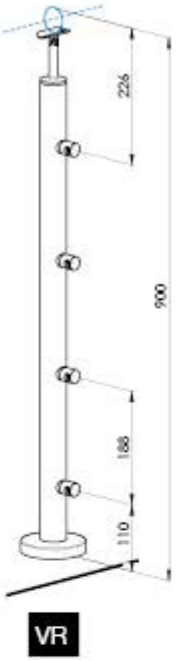

MODEL d12/1000-D42

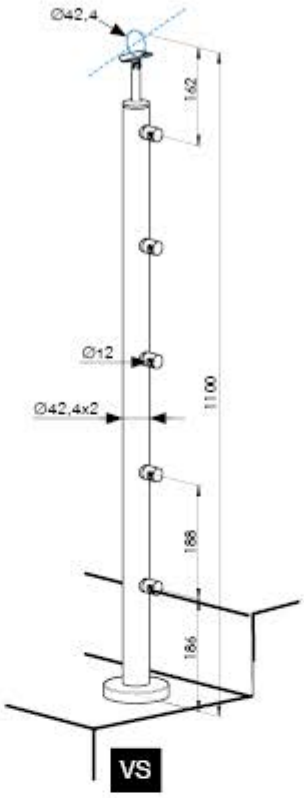

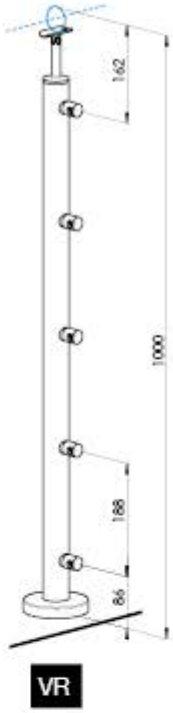

Quality	Finish	art.
AISI304	satin	A-VR100-5D12
		A-VS100-5D12
	polish	A-VR100-5D12-L
		A-VS100-5D12-L

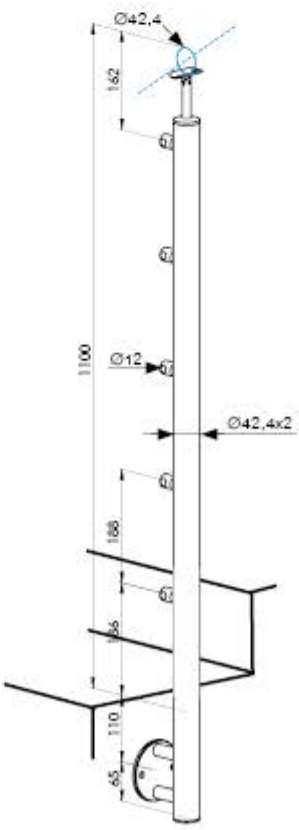

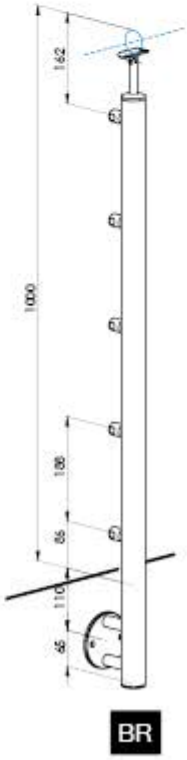

Quality	Finish	art.
AISI304	satin	A-BR100-5D12
		A-BS100-5D12

MODEL d12/900-40x40

Quality	Finish	art.
AISI304	satin	AJP-VR90-4D12
		AJP-VS90-4D12

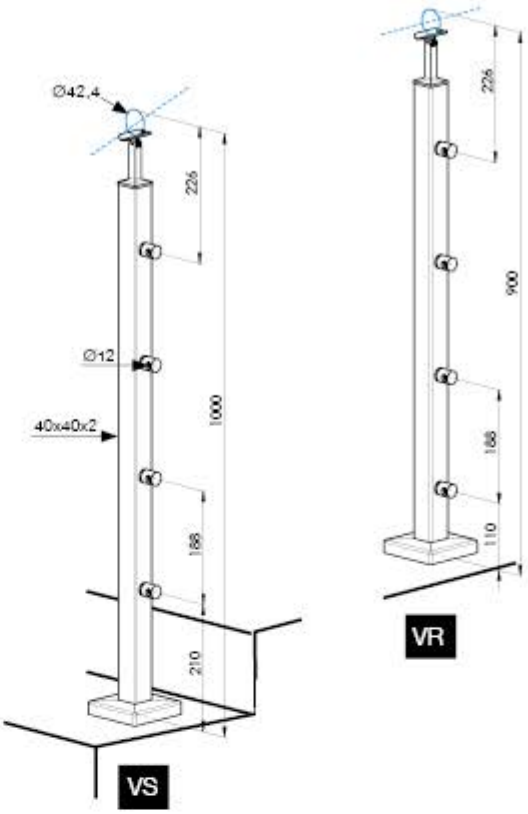

Quality	Finish	art.
AISI304	satin	AJP-BR90-4D12
		AJP-BS90-4D12

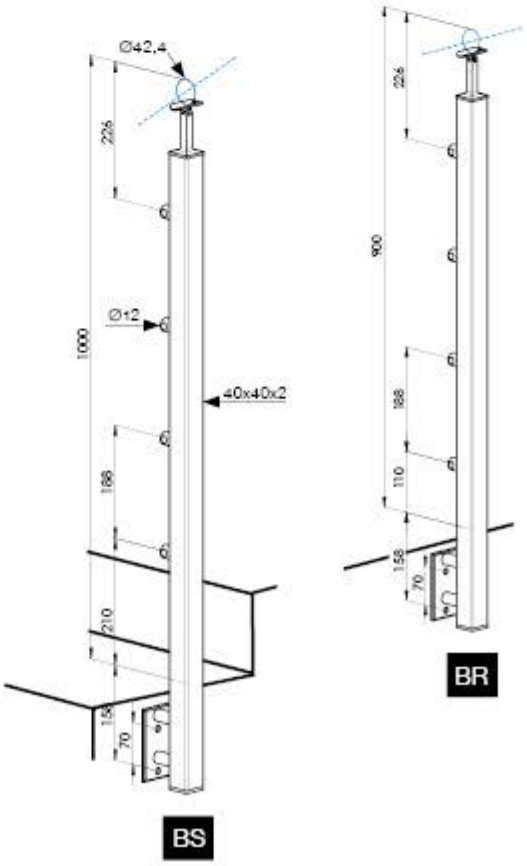

MODEL **d12/1000-40x40**

Quality	Finish	art.
AISI304	satin	AJP-VR100-5D12
		AJP-VS100-5D12

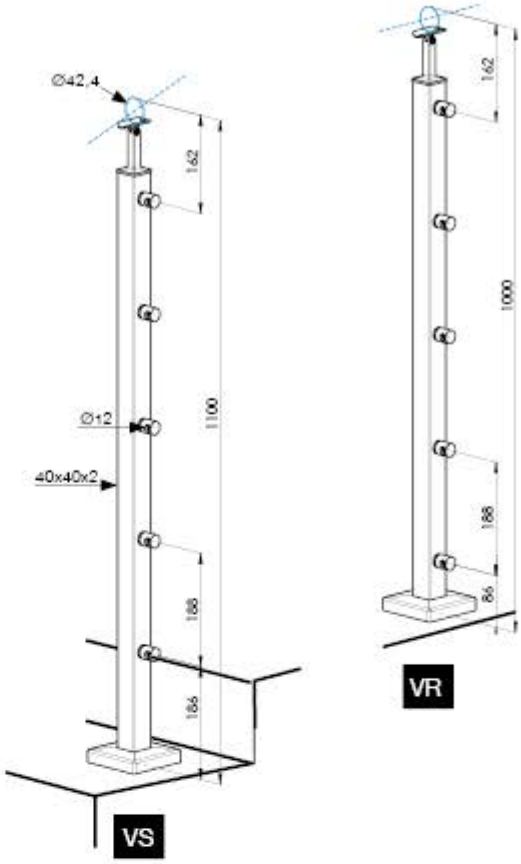

Quality	Finish	art.
AISI304	satin	AJP-BR100-5D12
		AJP-BS100-5D12

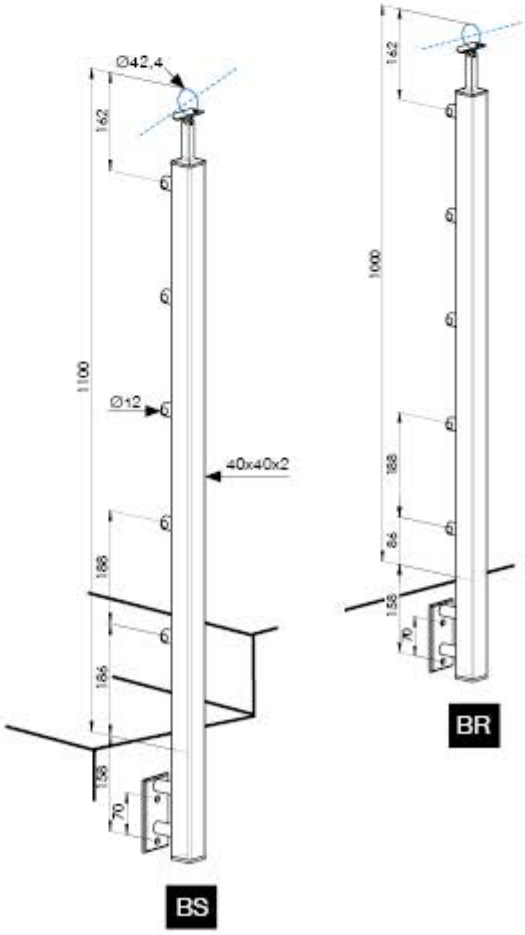

MODEL ATYP-SET/d/900

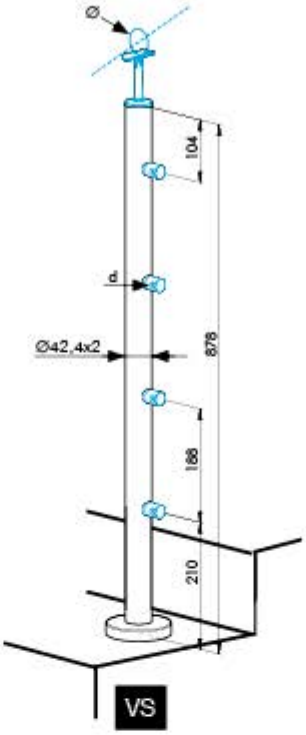

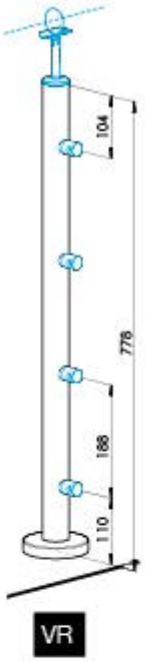

Quality	Finish	art.	d 10	12	14	16	Ø flat	33,7	42,4	48,3
AISI304	satin	ATYP-SET-VR90-4D								
		ATYP-SET-VS90-4D								

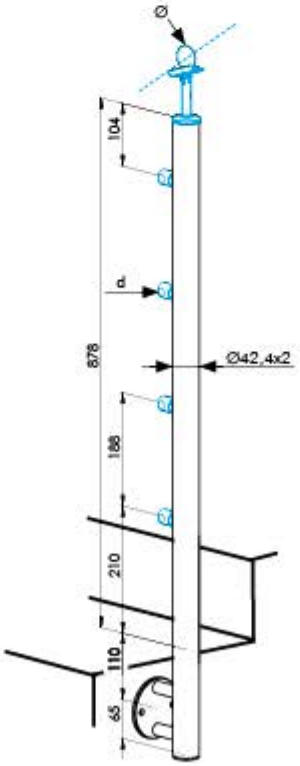

Quality	Finish	art.	d 10	12	14	16	Ø flat	33,7	42,4	48,3
AISI304	satin	ATYP-SET-BR90-4D								
		ATYP-SET-BS90-4D								

MODEL **ATYP-SET/d/1000**

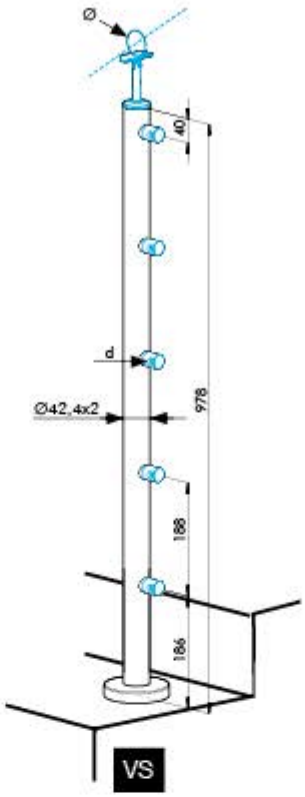

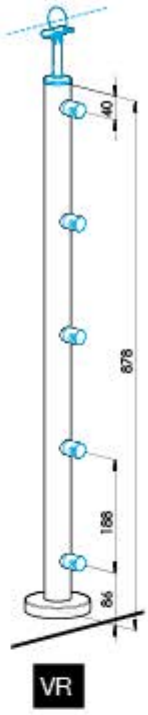

Quality	Finish	art.	d 10	12	14	16	Ø flat	33,7	42,4	48,3
AISI304	satin	ATYP-SET-VR100-5D								
		ATYP-SET-VS100-5D								

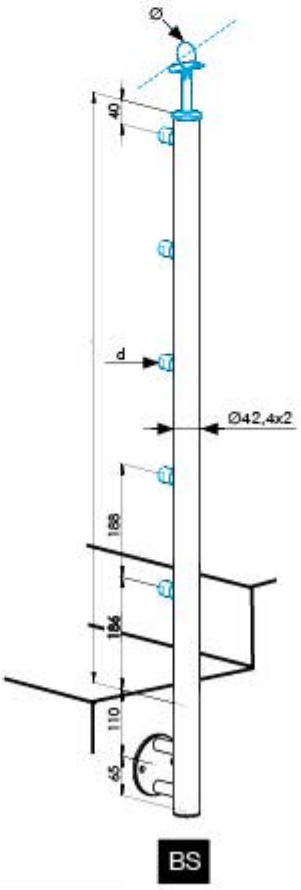

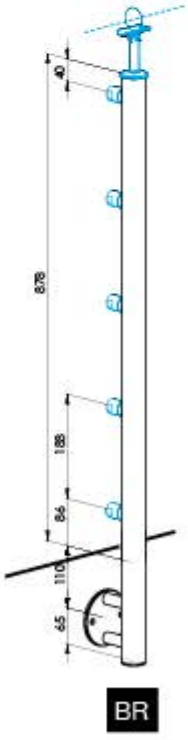

Quality	Finish	art.	d 10	12	14	16	Ø flat	33,7	42,4	48,3
AISI304	satin	ATYP-SET-BR100-5D								
		ATYP-SET-BS100-5D								

MODEL ATYP-INOX/D

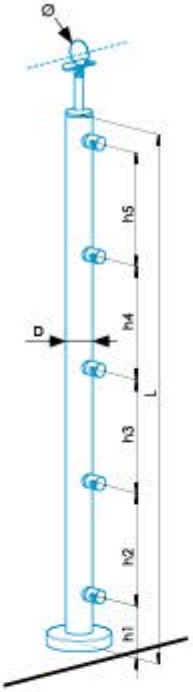

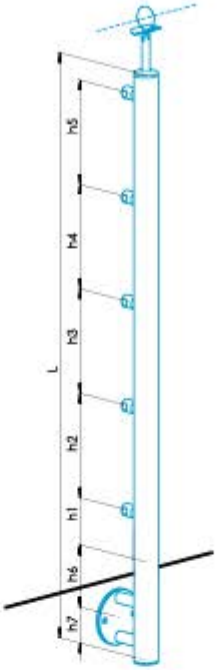

Quality	Finish	D	art.	L	h1	h2	h3	h4	h5	h6	h7	Pcs
AISI304	satin	42,4x2	ATYP-INOX A/42,4									
	polish		ATYP-INOX A/42,4-L									
AISI316	satin		ATYP-INOX A14/42,4									
Beech	natural	50	ATYP-INOX WB/D50									
Oak			ATYP-INOX WD/D50									

L=max. 1200mm, max. 7 holes

MODEL ATYP-INOX/40x40

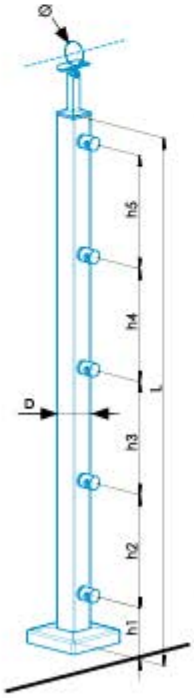

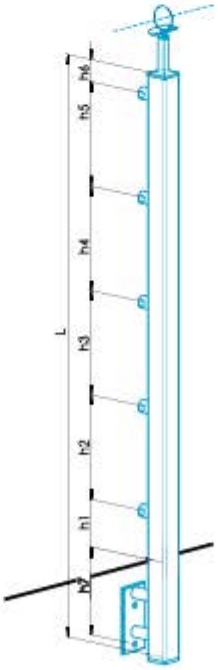

Quality	Finish	D	art.	L	h1	h2	h3	h4	h5	h6	h7	Pcs
AISI304	satin	40x40x2	ATYP-INOX A/40x40									
AISI316			ATYP-INOX A14/40x40									
Beech	natural	40x40	ATYP-INOX WB/40x40									
Oak			ATYP-INOX WD/40x40									

L=max. 1200mm, max. 7 holes

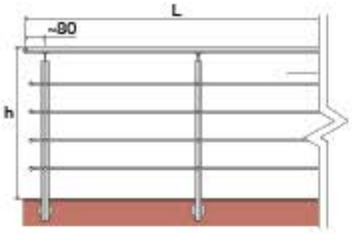

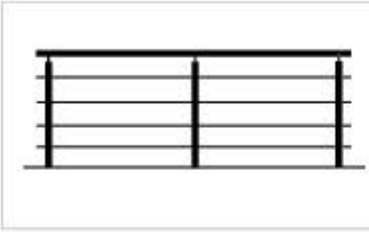

Quality	Finish	⌀	art.	L	h
AISI304	satin	42,4x2	A/ZVR90-1500	1500	900
			A/ZVR90-3000	3000	
			A/ZVR90-6000	6000	
			A/ZVR100-1500	1500	1000
			A/ZVR100-3000	3000	
			A/ZVR100-6000	6000	

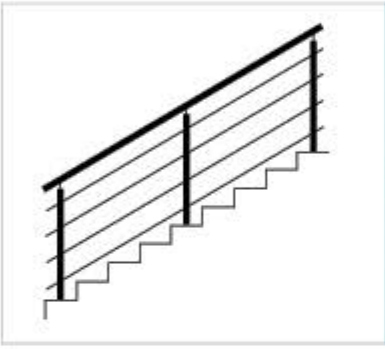

Quality	Finish	⌀	art.	L	h
AISI304	satin	42,4x2	A/ZVS90-1500	1500	900
			A/ZVS90-3000	3000	
			A/ZVS90-6000	6000	
			A/ZVS90-1500-L	1500	
			A/ZVS90-3000-L	3000	
			A/ZVS90-6000-L	6000	
			A/ZVS100-1500	1500	1000
			A/ZVS100-3000	3000	
			A/ZVS100-6000	6000	

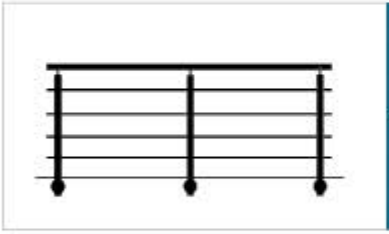

Quality	Finish	⌀	art.	L	h
AISI304	satin	42,4x2	A/ZBR90-1500	1500	900
			A/ZBR90-3000	3000	
			A/ZBR90-6000	6000	
			A/ZBR100-1500	1500	1000
			A/ZBR100-3000	3000	
			A/ZBR100-6000	6000	

Quality	Finish	⌀	art.	L	h
AISI304	satin	42,4x2	A/ZBS90-1500	1500	900
			A/ZBS90-3000	3000	
			A/ZBS90-6000	6000	
			A/ZBS100-1500	1500	1000
			A/ZBS100-3000	3000	
			A/ZBS100-6000	6000	

not assembled

2.3 VERTICAL RAILING

MODEL 1000/VER

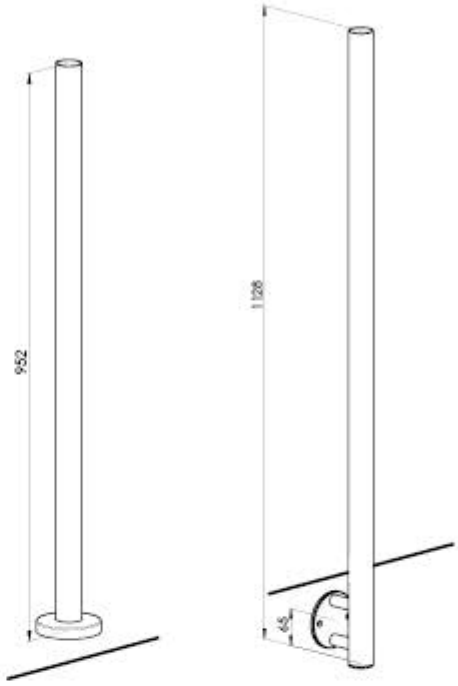

Quality	Finish	D	art.
AISI304	satin	42,4x2	A-VER-VR100
			A-VER-BR100

MODEL 1000/VER

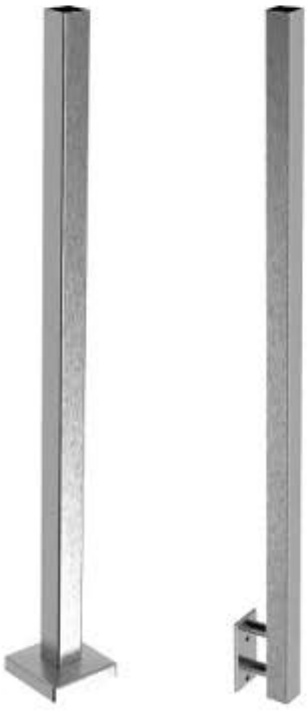

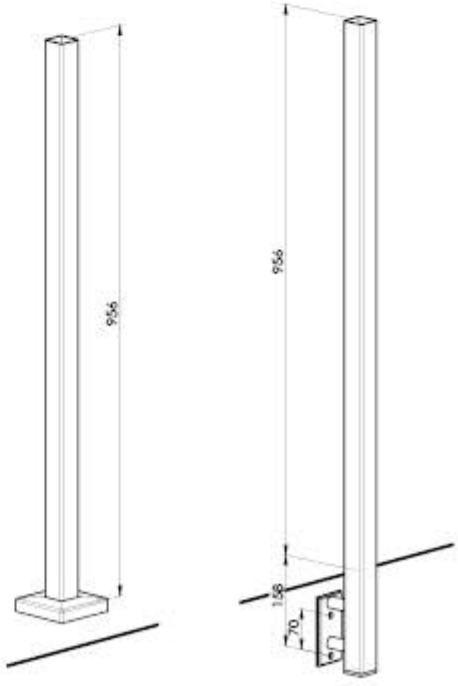

Quality	Finish	D	art.
AISI304	satin	40x40x2	AJP-VER-VR100
			AJP-VER-BR100

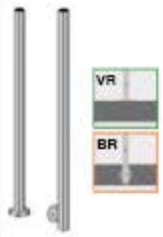									
A-VER-VR/BR	A/33,7x2 A/42,4x2	A/42,4x2-10x12-1300 A/42,4x2-15x12-2000	A/33,7x2- 15xM5-2000	A/12x1,5-3000	A/0502-042	A/0851-042	A/0832-012	A/5729-242	A/0727-242-S

	Quality	Finish	⌀	art.	L	h	A/0851-042	A/0832-012	A-VER-VR/BR	A/42,4x2-15x... A/33,7x2-15x...
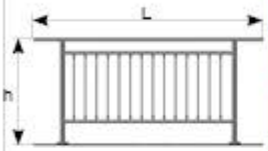	AISI304	satin	42,4x2	A/ZVVR100-2000-D33/D12	2000	1000	30x	-	2x	2x
	AISI304	satin	42,4x2	A/ZVVR100-2000-D42/D12	2000	1000	-	-	2x	2x
	AISI304	satin	42,4x2	A/ZVVR100-2000-D12/D12	2000	1000	-	30x	2x	-
	AISI304	satinn	42,4x2	A/ZVVS100-2000-D12/D12	2000	1000	-	30x	2x	-
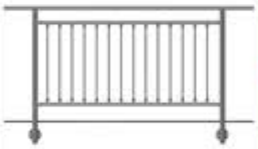	AISI304	satin	42,4x2	A/ZVBR100-2000-D33/D12	2000	1000	30x	-	2x	2x
	AISI304	satin	42,4x2	A/ZVBR100-2000-D42/D12	2000	1000	-	-	2x	2x
	AISI304	satin	42,4x2	A/ZVBR100-2000-D12/D12	2000	1000	-	30x	2x	-


Q/INOX-INSTALL-SET

not assembled

2.4 FRENCH BALCONIES

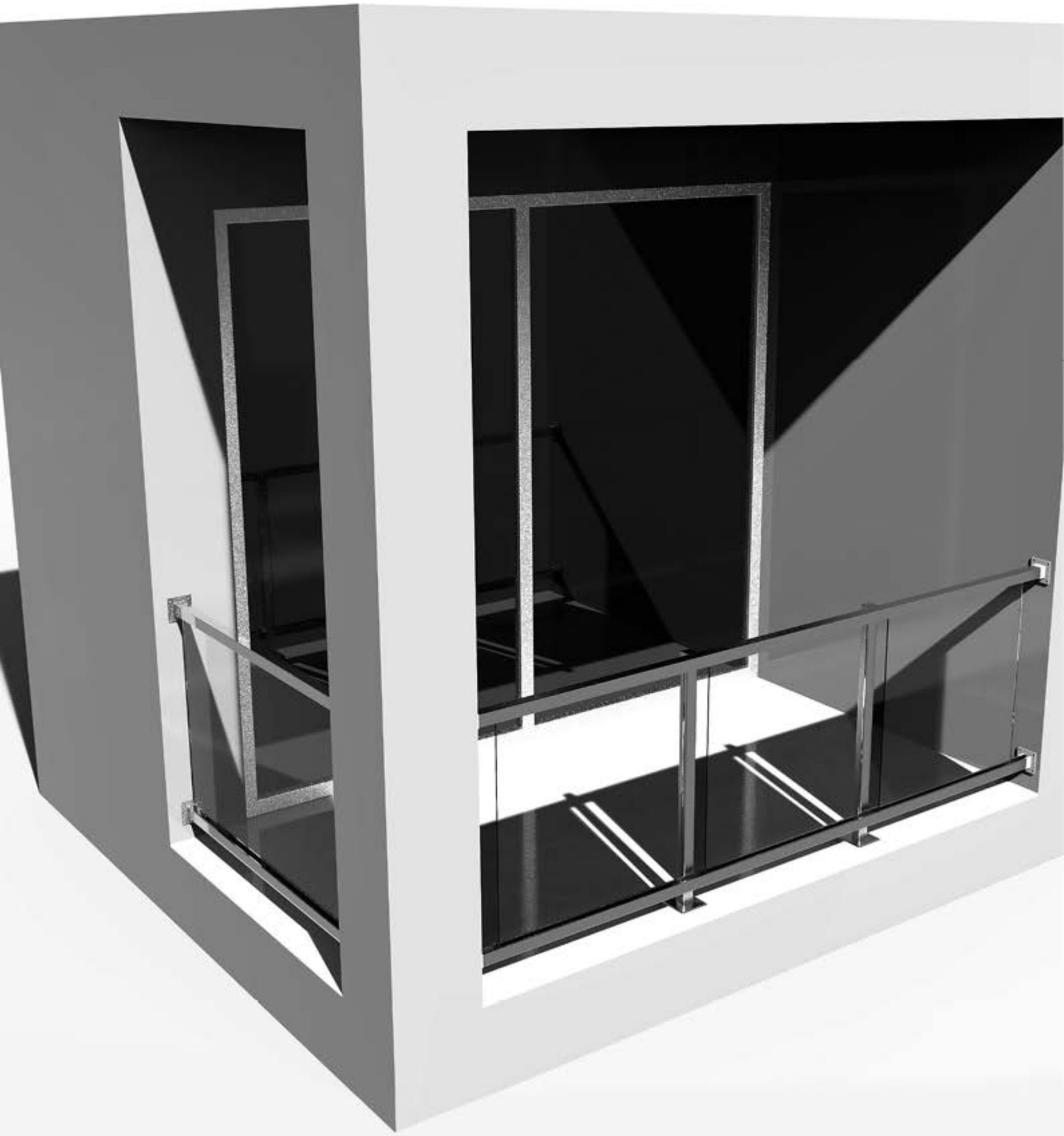

art.	glass t
GS-304/FRB2-800x1250-040	8,76 VSG

art.	glass t
GS-304/FRB2-900x5000-040	8,76 VSG

art.	glass t
GS-304/FRB2-800x1250-042	8,76 VSG

art.	glass t
GS-304/FRB2-800x2500-042	8,76 VSG

2.4 FRENCH BALCONIES

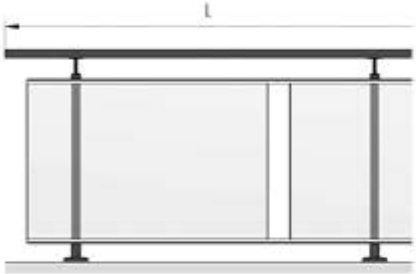

A/ZGALVR100-6000

					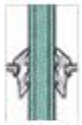
AJP-VER-VR100	A/4718-000-B	A/40x40x2	GS-AL/ZP-20x30/S/VA	GS/8,76- ...	GS-PVC/ZP...
AISI304	AISI304	AISI304	ALUMINIUM	GLASS	Rubber
5x	5x	6m	4x3m	5x	24 m

Types of anchoring

GS-AL/ZP-20x30/S/VA

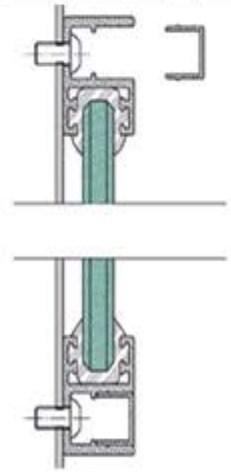

A/6925-040

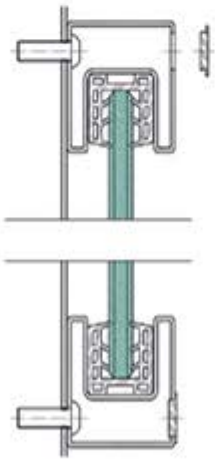

A/6900-020

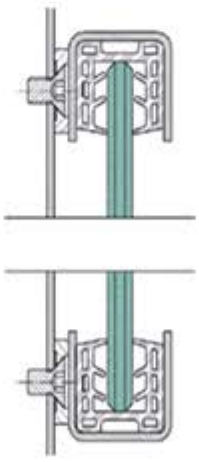

GS-AL/ZP-3535/N/E

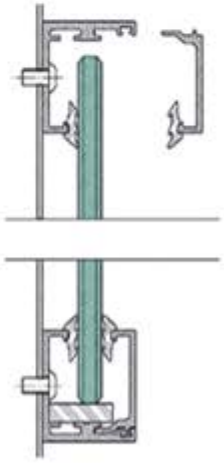

3 GLASS CLAMPS

3.1 GLASS CLAMPS AXIAL

3.2 GLASS CLAMPS FRONT

3.3 SHEET CLAMPS

umakov®
PRODUCT/SYSTEM/DESIGN

3.1 GLASS CLAMPS AXIAL

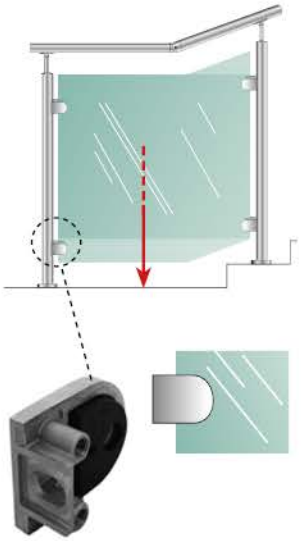

S1 SYSTEM

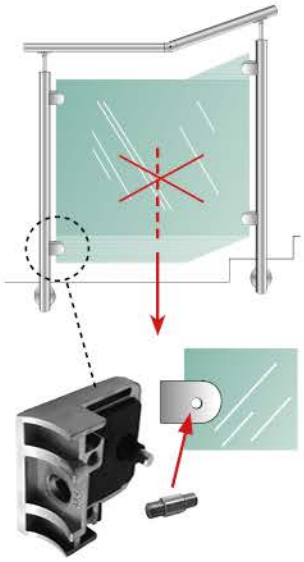

S2 SYSTEM

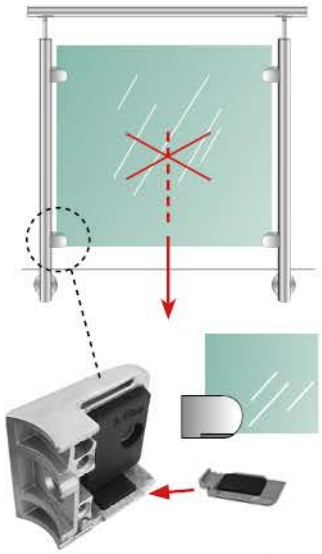

S3 SYSTEM

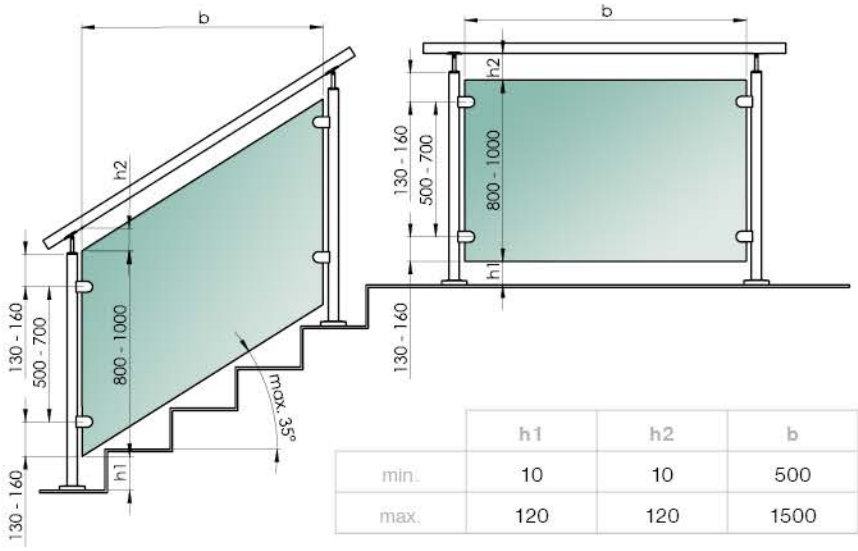

	h1	h2	b
min.	10	10	500
max.	120	120	1500

S1 SYSTEM

(kN/m2)		b (mm)				
		500	750	1000	1250	1500
Glass VSG/ESG t (mm)	8,76	2	1,5	0,75	0,5	
	10,76			1		0,5
	12,76		2	1,5	1	
	16,76	2,5	2		1,5	
	17,52					

S2 SYSTEM S3 SYSTEM

(kN/m2)		b (mm)				
		500	750	1000	1250	1500
Glass VSG/ESG t (mm)	8,76	2	1	0,5		
	10,76		1,5	1	0,5	
	12,76		2	1,5	1	0,5
	16,76	2,5		2	1,5	1
	17,52					

*Uvedené hodnoty sú orientačné nakoľko technické normy sa v jednotlivých krajinách líšia. Pri návrhu zábradlia je potrebné zohľadniť aj ďalšie faktory ako je veterná zóna, účel stavby, hĺbka prepadu, kotvenie stĺpika, …

*The values given are just informative because the technical standards vary from country to country. When designing railings, other factors have to be taken in consideration such as wind zone, purpose of construction, depth of overflow, post anchorage, …

MODEL	SYSTEM			plate t			glass t													
	S1	S2	S3	1,5	2	3	4	6	6,76	8	8,76	10	10,76	12	12,76	13,52	16,76	17,52	20,76	21,52
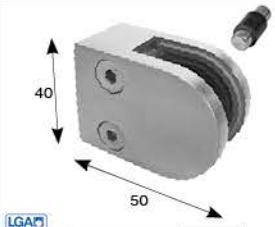 LGA AbP MODEL 20		✓		1,5-3				6-10,76												
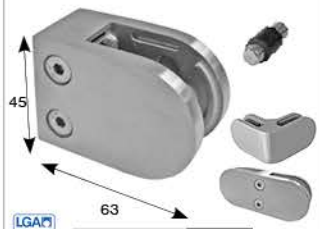 LGA AbP MODEL 22		✓		1,5-3						8-10,76										
 LGA AbP MODEL 25		✓						6-12,76												
 LGA AbP MODEL 250P		✓	✓					6-12,76												
 MODEL 25FX new								6-12,76												
 MODEL 28	✓						4-6			8										

MODEL	SYSTEM			plate t			glass t													
	S1	S2	S3	1,5	2	3	4	6	6,76	8	8,76	10	10,76	12	12,76	13,52	16,76	17,52	20,76	21,52
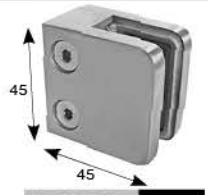 MODEL 21	✓			1,5-3				6-10,76												
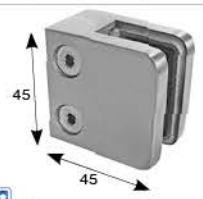 LGA AbP MODEL 23 new	✓							6-10,76												
 LGA AbP MODEL 230P		✓	✓					6-10,76												
 LGA AbP MODEL 23KP new		✓	✓							8-12,76										
 MODEL 24		✓	✓											12-16,76						
 LGA AbP MODEL 26		✓	✓							8-12,76										
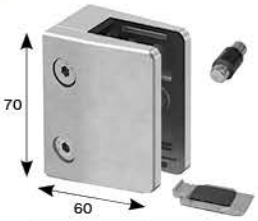 MODEL 27 new		✓	✓															17,52-21,52		
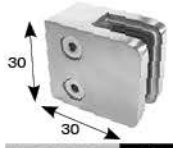 MODEL 29	✓						4-6			8										

GLASS CLAMPS

MODEL **20**

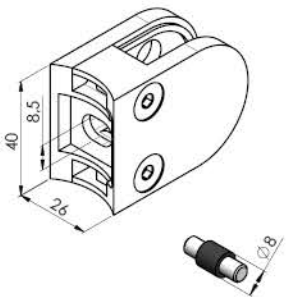

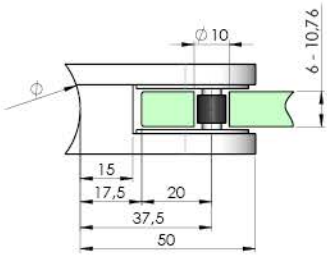

Quality	Finish	art.	∅	90°		A-DIN 912-A2 M8x20	A19/04-PVC	
AISI304	satin	A/2000-033	33,7		1x			top
		A/2000-042	42,4	✓				
		A/2000-042-set4			4x	4x	8x	new
		A/2000-048	48,3		1x			
	polish	A/2000-033-L	33,7					
		A/2000-042-L	42,4	✓				
		A/2000-048-L	48,3					
AISI316	satin	A14/2000-033	33,7					
		A14/2000-042	42,4					
		A14/2000-048	48,3	✓				
	polis	A14/2000-042-L	42,4					
ZAMAK	raw	ZN/2000-033	33,7					
		ZN/2000-042	42,4					
	satin	ZN-SATIN/2000-042	42,4	✓				
	polish	ZN-POLISH/2000-042	42,4					

	plate t			glass t					
	1,5	2	3	6	6,76	8	8,76	10	10,76
	A19/20-0015	A19/20-002	A19/20-003	A19/20-006	A19/20-007	A19/20-008	A19/20-009	A19/20-010	A19/20-011

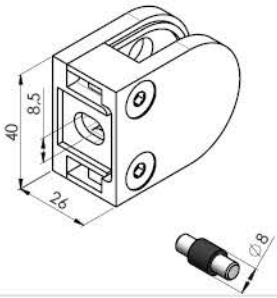

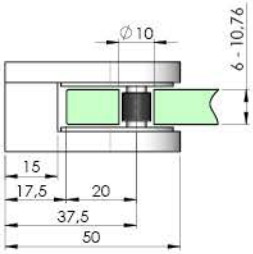

Quality	Finish	art.		A-DIN 912-A2 M8x20	A19/04-PVC	
AISI304	satin	A/2000-000	1x			
		A/2000-000-set4	4x	4x	8x	new
	polish	A/2000-000-L	1x			
AISI316	satin	A14/2000-000				
	polish	A14/2000-000-L				
ZAMAK	raw	ZN/2000-000				
	satin	ZN-SATIN/2000-000				
	polish	ZN-POLISH/2000-000				

	plate t			glass t					
	1,5	2	3	6	6,76	8	8,76	10	10,76
	A19/20-0015	A19/20-002	A19/20-003	A19/20-006	A19/20-007	A19/20-008	A19/20-009	A19/20-010	A19/20-011

MODEL **22**

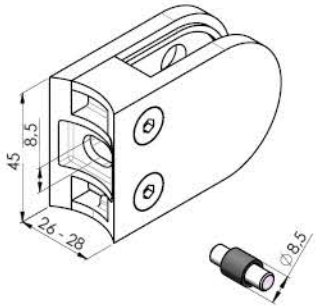

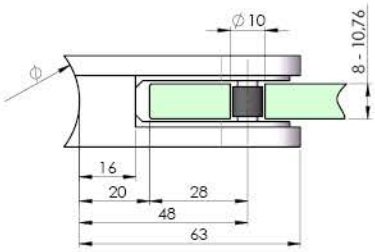

Quality	Finish	art.	∅	90°		A-DIN 912-A2 M8x20	A19/04-PVC
AISI304	satin	A/2200-042	42,4	✓	1x		
		A/2200-048	48,3				
	polish	A/2200-042-L	42,4				
		A/2200-048-L	48,3				
AISI316	satin	A14/2200-042	42,4				
		A14/2200-048	48,3				
	polish	A14/2200-042-L	42,4				
ZAMAK	raw	ZN/2200-042	42,4				
	satin	ZN-SATIN/2200-042					

top

	plate t			glass t			
	1,5	2	3	8	8,76	10	10,76
	A19/22-0015	A19/22-002	A19/22-003	A19/22-008	A19/22-009	A19/22-010	A19/22-011

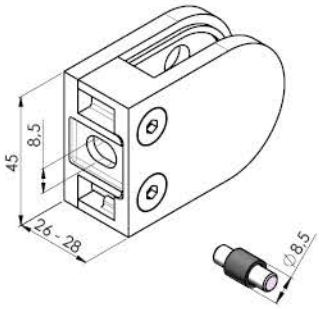

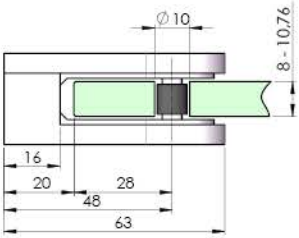

Quality	Finish	art.		A-DIN 912-A2 M8x20	A19/04-PVC
AISI304	satin	A/2200-000	1x		
	polish	A/2200-000-L			
AISI316	satin	A14/2200-000			
	polish	A14/2200-000-L			
ZAMAK	raw	ZN/2200-000			
	satin	ZN-SATIN/2200-000			

	plate t			glass t			
	1,5	2	3	8	8,76	10	10,76
	A19/22-0015	A19/22-002	A19/22-003	A19/22-008	A19/22-009	A19/22-010	A19/22-011

MODEL 22

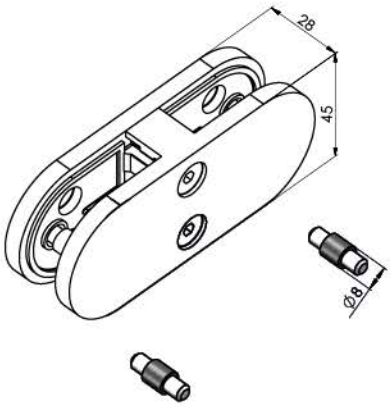

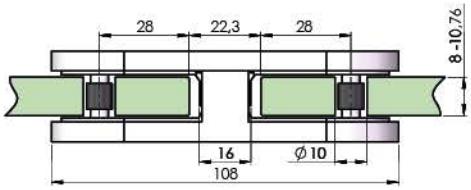

Quality	Finish	art.		 A19/04-PVC
AISI316	satin	A14/2200-700	1x	

	plate t			glass t			
	1,5	2	3	8	8,76	10	10,76
	A19/22-0015	A19/22-002	A19/22-003	A19/22-008	A19/22-009	A19/22-010	A19/22-011

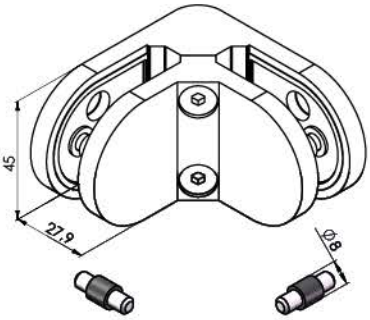

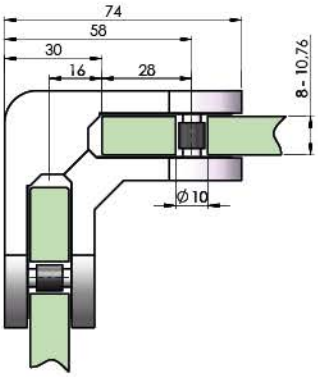

Quality	Finish	art.		 A19/04-PVC
AISI316	satin	A14/2200-900-B	1x	

	plate t			glass t			
	1,5	2	3	8	8,76	10	10,76
	A19/22-0015	A19/22-002	A19/22-003	A19/22-008	A19/22-009	A19/22-010	A19/22-011

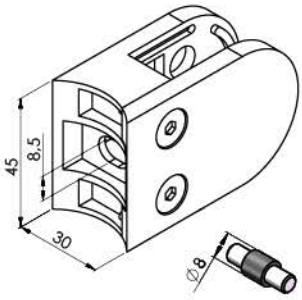

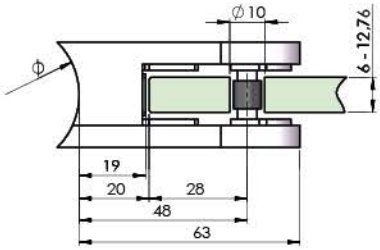

Quality	Finish	art.	∅	90°		A-DIN 912-A2 M8x20	A19/04-PVC	
AISI304	satin	A/2500-042	42,4	✓	1x			top
		A/2500-042-set4			4x	4x	8x	new
		A/2500-048	48,3		1x			
		A/2500-048-set4			4x	4x	8x	new
AISI316		A14/2500-042	42,4		1x			
		A14/2500-048	48,3					

glass t							
6	6,76	8	8,76	10	10,76	12	12,76
A19/25-006	A19/25-007	A19/25-008	A19/25-009	A19/25-010	A19/25-011	A19/25-012	A19/25-013
new	new						

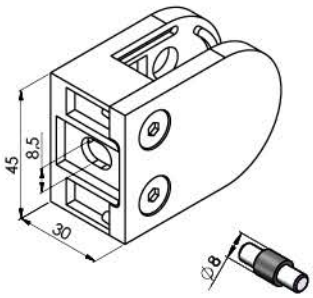

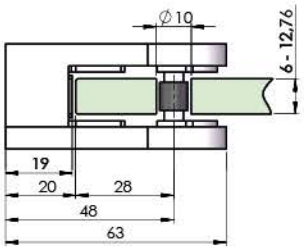

Quality	Finish	art.		A-DIN 912-A2 M8x20	A19/04-PVC	
AISI304	satin	A/2500-000	1x			
		A/2500-000-set4	4x	4x	8x	new
AISI316		A14/2500-000	1x			

glass t							
6	6,76	8	8,76	10	10,76	12	12,76
A19/25-006	A19/25-007	A19/25-008	A19/25-009	A19/25-010	A19/25-011	A19/25-012	A19/25-013
new	new						

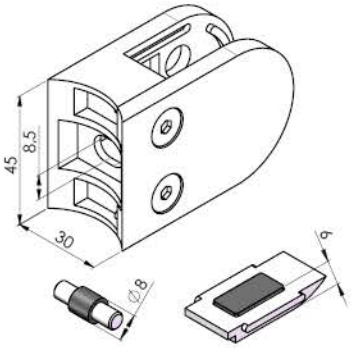

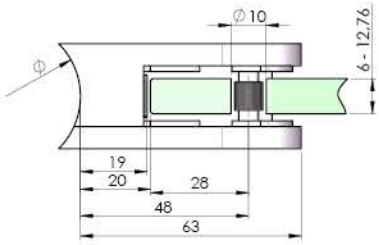

Quality	Finish	art.	∅	90°		A-DIN 912-A2 M8x20	A19/04-PVC	
AISI304	satin	A/250P-042			1x			
		A/250P-042-set4	42,4	✓	4x	4x	8x	new
ZAMAK	raw	ZN/250P-042			1x			

	glass t							
	6	6,76	8	8,76	10	10,76	12	12,76
	A19/25-006	A19/25-007	A19/25-008	A19/25-009	A19/25-010	A19/25-011	A19/25-012	A19/25-013
	new	new						

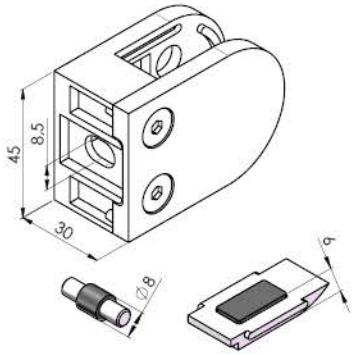

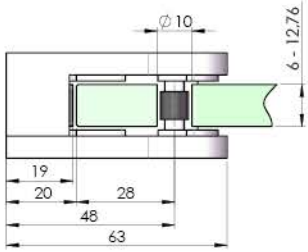

Quality	Finish	art.		A-DIN 912-A2 M8x20	A19/04-PVC	
AISI304	satin	A/250P-000	1x			
		A/250P-000-set4	4x	4x	8x	new
ZAMAK	raw	ZN/250P-000	1x			

	glass t							
	6	6,76	8	8,76	10	10,76	12	12,76
	A19/25-006	A19/25-007	A19/25-008	A19/25-009	A19/25-010	A19/25-011	A19/25-012	A19/25-013
	new	new						

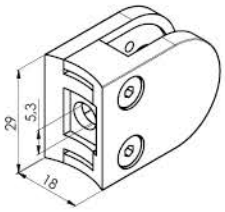

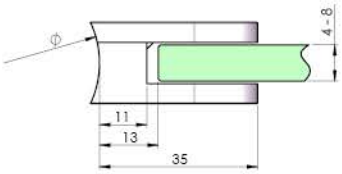

Quality	Finish	art.	∅	90°		A-DIN 912-A2 M5x20
AISI304	satin	A/2800-033	33,7	✓	c	
		A/2800-042	42,4			

	glass t		
	4	6	8
	A19/28-004	A19/28-006	A19/28-008

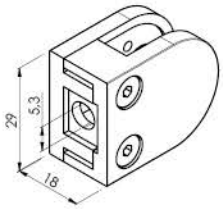

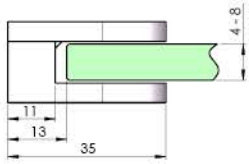

Quality	Finish	art.		A-DIN 912-A2 M5x20
AISI304	satin	A/2800-000	1x	

	glass t		
	4	6	8
	A19/28-004	A19/28-006	A19/28-008

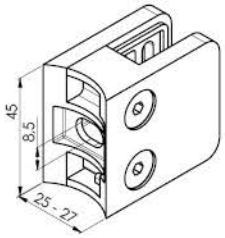

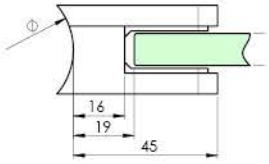

Quality	Finish	art.	∅	90°		A-DIN 912-A2 M8x20	A19/04-PVC	
AISI304	satin	A/2100-033	33,7		1x			
		A/2100-042	42,4					
		A/2100-042-set4	42,4	✓	4x	4x	8x	new
		A/2100-048	48,3					
	polish	A/2100-042-L	42,4					
AISI316	satin	A14/2100-033	33,7					
		A14/2100-042	42,4					
		A14/2100-048	48,3		1x			
	polish	A14/2100-042-L	42,4	✓				
ZAMAK	raw	ZN/2100-042						
	satin	ZN-SATIN/2100-042	42,4					
	polish	ZN-POLISH/2100-042						

	plate t			glass t					
	1,5	2	3	6	6,76	8	8,76	10	10,76
	A19/21-0015	A19/21-002	A19/21-003	A19/21-006	A19/21-007	A19/21-008	A19/21-009	A19/21-010	A19/21-011

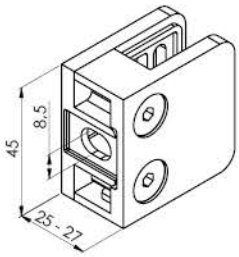

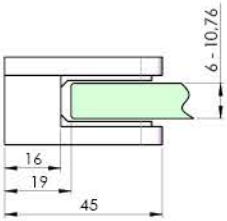

LGA AbP

Quality	Finish	art.		A-DIN 912-A2 M8x20	A19/04-PVC
AISI304	satin	A/2100-000			
	polish	A/2100-000-L			
AISI316	satin	A14/2100-000			
	polish	A14/2100-000-L	1x		
ZAMAK	raw	ZN/2100-000			
	satin	ZN-SATIN/2100-000			
	polish	ZN-POLISH/2100-000			

	plate t			glass t					
	1,5	2	3	6	6,76	8	8,76	10	10,76
	A19/21-0015	A19/21-002	A19/21-003	A19/21-006	A19/21-007	A19/21-008	A19/21-009	A19/21-010	A19/21-011

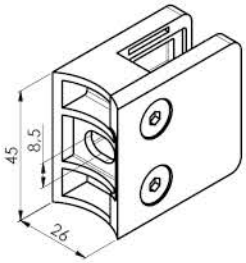

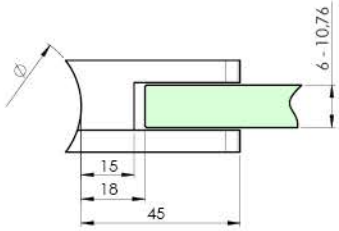

Quality	Finish	art.	Ø	90°		A-DIN 912-A2 M8x20	A19/04-PVC	
AISI304	satin	A/2300-042			1x			
		A/2300-042-set4			4x	4x	8x	new
	polish	A/2300-042-L	42,4	✓				new
AISI316	satin	A14/2300-042			1x			new
ZAMAK	raw	ZN/2300-042						

	glass t					
	6	6,76	8	8,76	10	10,76
	A19/23-P06/K08	A19/23-P07/K09	A19/23-P08/K10	A19/23-P09/K11	A19/23-P10/K12	A19/23-P11/K13

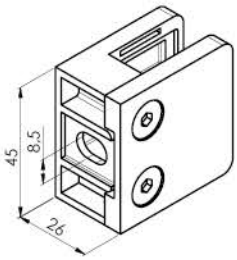

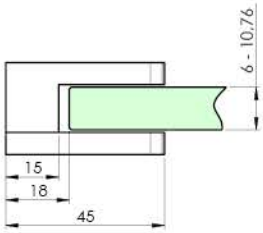

Quality	Finish	art.		A-DIN 912-A2 M8x20	A19/04-PVC	
AISI304	satin	A/2300-000	1x			top
		A/2300-000-set4	4x	4x	8x	new
	polish	A/2300-000-L				new
AISI316	satin	A14/2300-000	1x			new
ZAMAK	raw	ZN/2300-000				

	glass t					
	6	6,76	8	8,76	10	10,76
	A19/23-P06/K08	A19/23-P07/K09	A19/23-P08/K10	A19/23-P09/K11	A19/23-P10/K12	A19/23-P11/K13

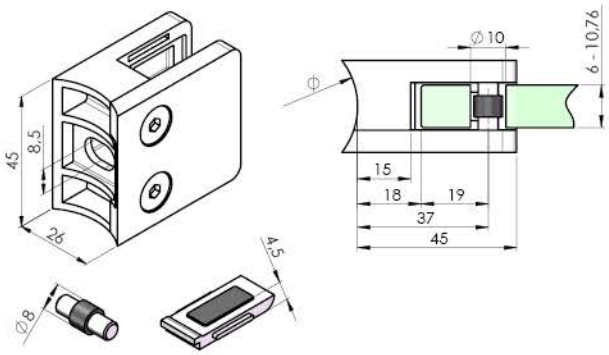

Quality	Finish	art.	⌀	90°		A-DIN 912-A2 M8x20	A19/04-PVC	
AISI304	satin	A/230P-033	33,7	-	1x			
		A/230P-042	42,4					top
		A/230P-042-set4			4x	4x	8x	new
		A/230P-048	48,3					
	polish	A/230P-042-L	42,4	✓				
AISI316	satin	A14/230P-042			1x			
		A14/230P-048	48,3					
	polish	A14/230P-042-L	42,4					
ZAMAK	raw	ZN/230P-042	42,4					

	glass t					
	6	6,76	8	8,76	10	10,76
	A19/23-P06/K08	A19/23-P07/K09	A19/23-P08/K10	A19/23-P09/K11	A19/23-P10/K12	A19/23-P11/K13

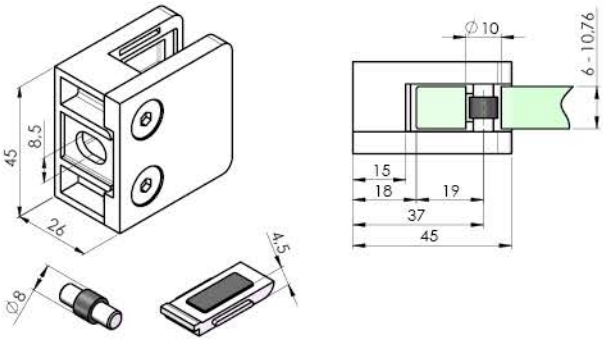

Quality	Finish	art.		A-DIN 912-A2 M8x20	A19/04-PVC	
AISI304	satin	A/230P-000	1x			top
		A/230P-000-set4	4x	4x	8x	new
	polish	A/230P-000-L	1x			
AISI316	satin	A14/230P-000				
	polish	A14/230P-000-L				
ZAMAK	raw	ZN/230P-000				

	glass t					
	6	6,76	8	8,76	10	10,76
	A19/23-P06/K08	A19/23-P07/K09	A19/23-P08/K10	A19/23-P09/K11	A19/23-P10/K12	A19/23-P11/K13

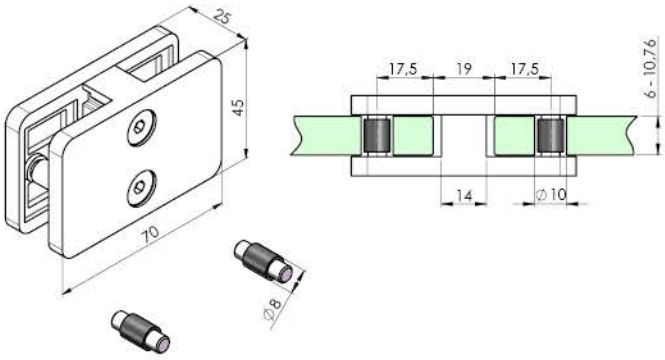

Quality	Finish	art.		A19/04-PVC
AISI316	satin	A14/230P-700	1x	

	glass t					
	6	6,76	8	8,76	10	10,76
	A19/23-P06/K08	A19/23-P07/K09	A19/23-P08/K10	A19/23-P09/K11	A19/23-P10/K12	A19/23-P11/K13

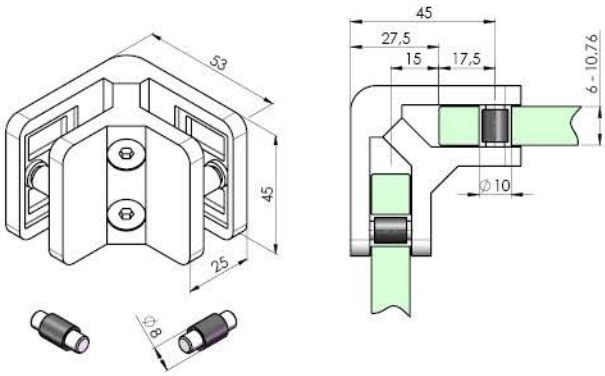

Quality	Finish	art.		A19/04-PVC
AISI316	satin	A14/230P-900	1x	

	glass t					
	6	6,76	8	8,76	10	10,76
	A19/23-P06/K08	A19/23-P07/K09	A19/23-P08/K10	A19/23-P09/K11	A19/23-P10/K12	A19/23-P11/K13

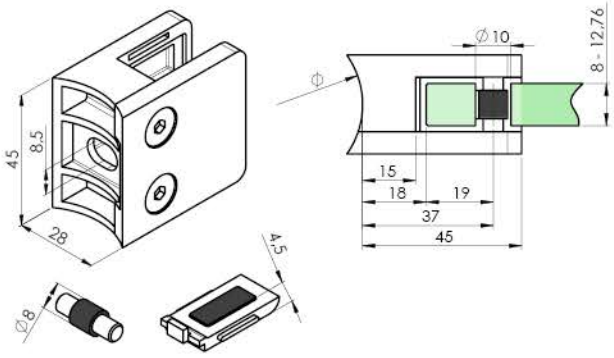

Quality	Finish	art.	∅	90°		A-DIN 912-A2 M8x20	A19/04-PVC	
AISI304	satin	A/23KP-042	42,4					new
		A/23KP-042-set4			4x	4x	8x	new
	polish	A/23KP-042-L	42,4	✓				new
AISI316	satin	A14/23KP-042						new
	polish	A14/23KP-042-L	42,4					new

	glass t					
	8	8,76	10	10,76	12	12,76
	A19/23-P06/K08	A19/23-P07/K09	A19/23-P08/K10	A19/23-P09/K11	A19/23-P10/K12	A19/23-P11/K13

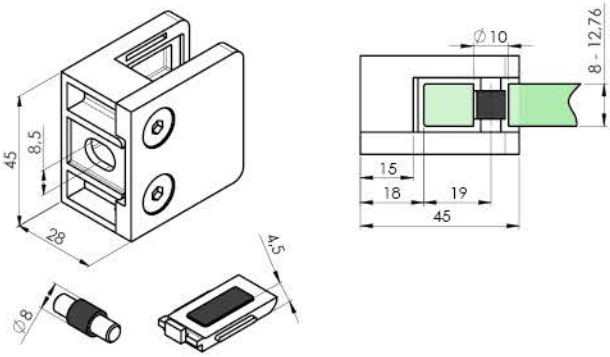

Quality	Finish	art.		A-DIN 912-A2 M8x20	A19/04-PVC	
AISI304	satin	A/23KP-000				new
		A/23KP-000-set4	4x	4x	8x	new
	polish	A/23KP-000-L				new
AISI316	satin	A14/23KP-000				new
	polish	A14/23KP-000-L				new

	glass t					
	8	8,76	10	10,76	12	12,76
	A19/23-P06/K08	A19/23-P07/K09	A19/23-P08/K10	A19/23-P09/K11	A19/23-P10/K12	A19/23-P11/K13

MODEL **24**

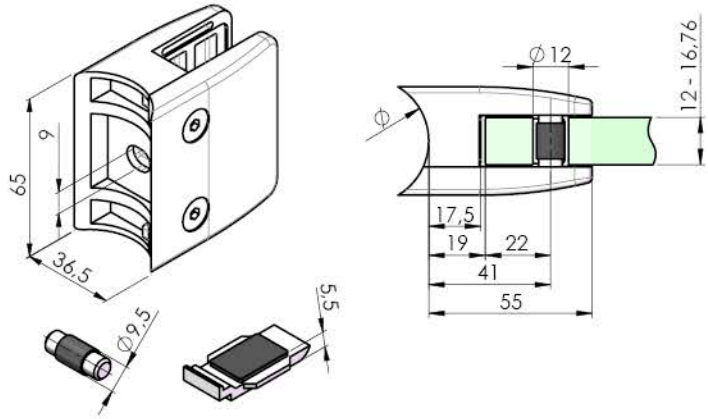

Quality	Finish	art.	∅	90°		A-DIN 912-A2 M8x20	A19/04-PVC	
AISI304	satin	A/2400-042	42,4	-	1x			
		A/2400-042-set4			4x	4x	8x	new
AISI316		A14/2400-042			1x			
		A14/2400-048	48,3					
ZAMAK	raw	ZN/2400-042	42,4					

glass t			
12,00	12,76	13,52	16,76
A19/24-012	A19/24-013	A19/24-014	A19/24-017

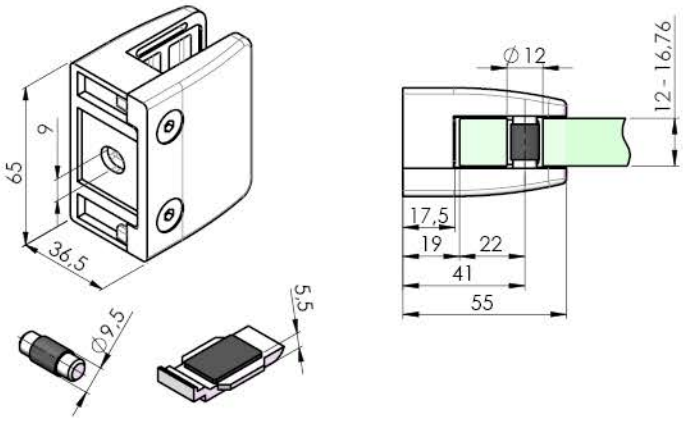

Quality	Finish	art.		A-DIN 912-A2 M8x20	A19/04-PVC	
AISI304	satin	A/2400-000	1x			
		A/2400-000-set4	4x	4x	8x	new
AISI316		A14/2400-000	1x			new
ZAMAK	raw	ZN/2400-000				

glass t			
12,00	12,76	13,52	16,76
A19/24-012	A19/24-013	A19/24-014	A19/24-017

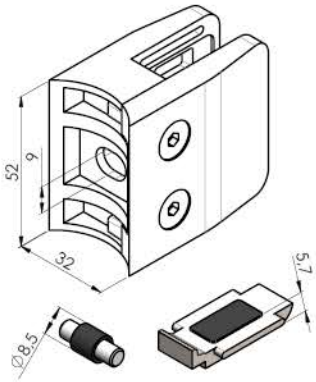

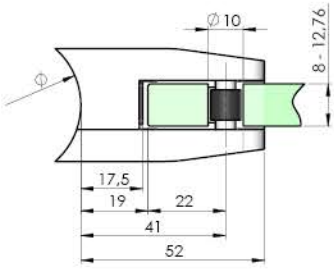

Quality	Finish	art.	∅	90°		A-DIN 912-A2 M8x20	A19/04-PVC	
AISI304	satin	A/2600-042	42,4	-	1x			
		A/2600-042-set4			4x	4x	8x	new
		A/2600-048	48,3		1x			
AISI316		A14/2600-042	42,4					
		A14/2600-048	48,3					
ZAMAK	raw	ZN/2600-042	42,4					
		ZN/2600-048	48,3					
	satin	ZN-SATIN/2600-042	42,4					

glass t					
8	8,76	10	10,76	12	12,76
A19/26-008	A19/26-009	A19/26-010	A19/26-011	A19/26-012	A19/26-013

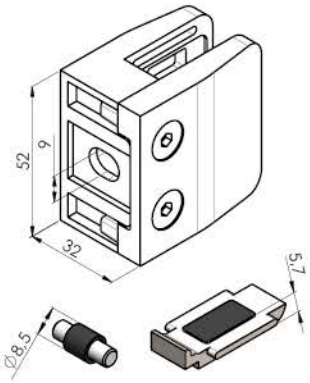

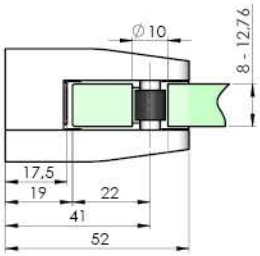

Quality	Finish	art.		A-DIN 912-A2 M8x20	A19/04-PVC	
AISI304	satin	A/2600-000	1x			top
		A/2600-000-set4	4x	4x	8x	new
AISI316		A14/2600-000	1x			
ZAMAK	raw	ZN/2600-000				
	satin	ZN-SATIN/2600-000				

glass t					
8	8,76	10	10,76	12	12,76
A19/26-008	A19/26-009	A19/26-010	A19/26-011	A19/26-012	A19/26-013

MODEL 27

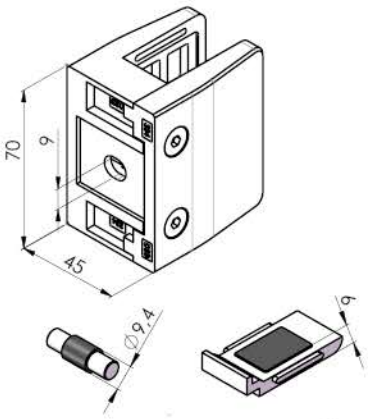

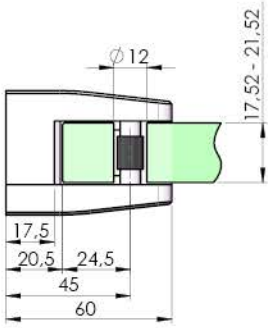

Quality	Finish	art.		 A-DIN 912-A2 M8x20	 A19/04-PVC
AISI316	raw	A14/2700-000	1x		

new

	glass t		
	17,52	20,76	21,52
	A19/27-018	A19/27-021	A19/27-022
	new	new	new

MODEL 29

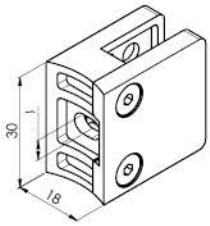

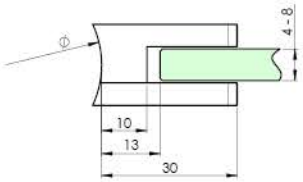

Quality	Finish	art.	∅	 90°		 A-DIN 912-A2 M5x20
AISI304	satin	A/2900-033	33,7	✓	1x	
		A/2900-042	42,4			

	glass t		
	4	6	8
	A19/29-004	A19/29-006	A19/29-008

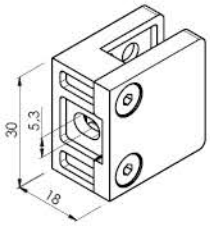

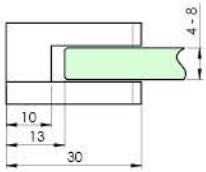

Quality	Finish	art.		 A-DIN 912-A2 M5x20
AISI304	satin	A/2900-000	1x	

	glass t		
	4	6	8
	A19/29-004	A19/29-006	A19/29-008

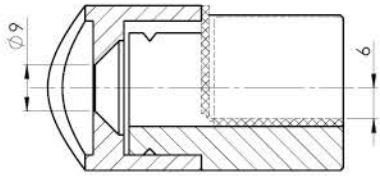

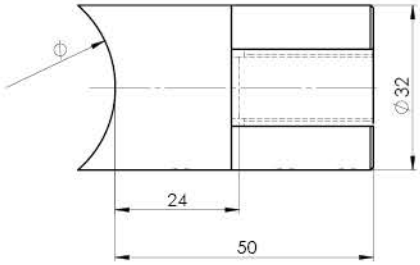

Quality	Finish	art.	∅	glass t	90°	A4-DIN 7991 M8x20	
AISI316	satin	A14/0783-000	flat	8 - 12,76	✓	1x	new
		A14/0783-042	42,4		-		new

Quality	Finish	art.	∅	glass t	90°	A4-DIN 7991 M8x20	
AISI316	satin	A14/0782-000	flat	8 - 12,76	✓	1x	new
		A14/0782-042	42,4		-		new

	glass t					
	8	8,76	10	10,76	12	12,76
	A19/07-009		A19/07-011		A19/07-013	

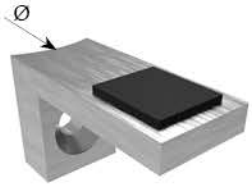

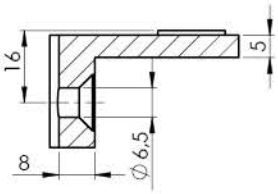

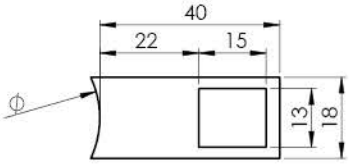

Quality	Finish	art.	∅	90°	A-DIN 7991-A2 M6x16	
AISI304	satin	A/1000-000	flat	✓	1x	new
		A/1000-042	42,4			new

3.2 GLASS CLAMPS FRONT

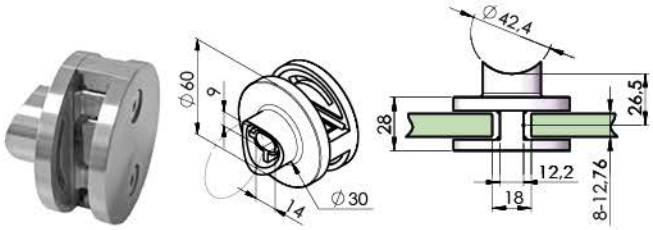

Quality	Finish	art.	A-DIN 7380-A2 M8x20	A19/04-PVC
AISI304	satin	A/4100-042	1x	

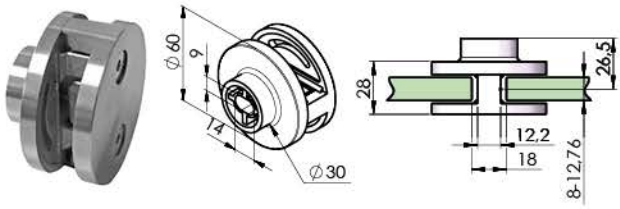

Quality	Finish	art.	A-DIN 7380-A2 M8x20	A19/04-PVC
AISI304	satin	A/4100-000	1x	

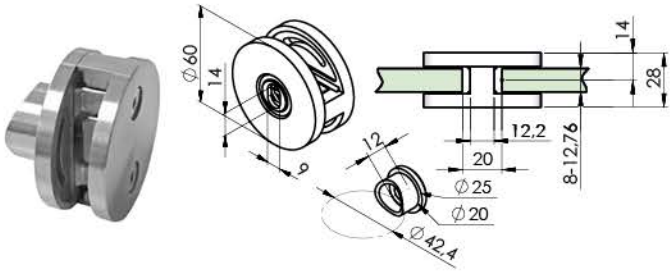

Quality	Finish	art.	A-DIN 7380-A2 M8x20	A19/04-PVC
AISI304	satin	A/4100-742	1x	

new

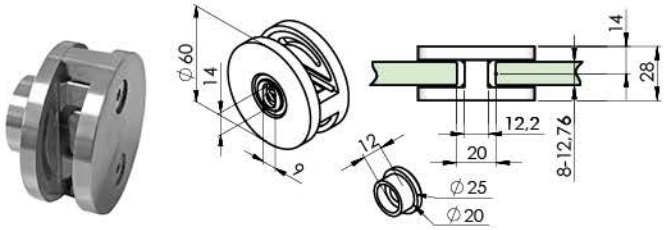

Quality	Finish	art.	A-DIN 7380-A2 M8x20	A19/04-PVC
AISI304	satin	A/4100-700	1x	

new

	glass t					
	8	8,76	10	10,76	12	12,76
	A19/4041-008	A19/4041-009	A19/4041-010	A19/4041-011	A19/4041-012	A19/4041-013

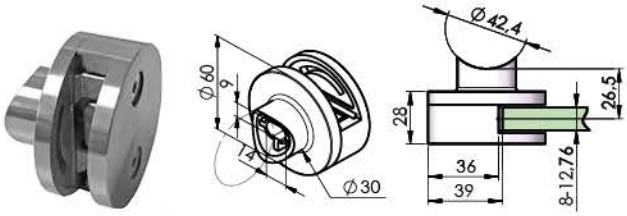

Quality	Finish	art.		A-DIN 7380-A2 M8x20	A19/04-PVC
AISI304	satin	A/4000-042	1x		

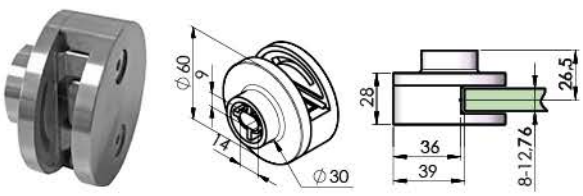

Quality	Finish	art.		A-DIN 7380-A2 M8x20	A19/04-PVC
AISI304	satin	A/4000-000	1x		

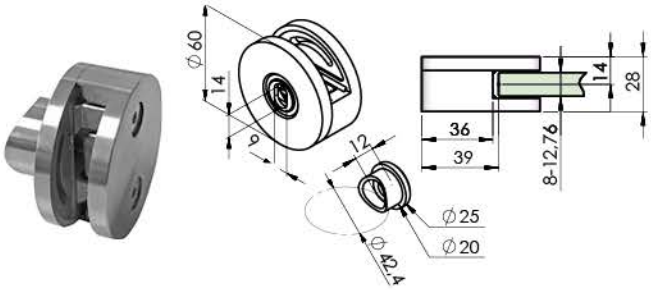

Quality	Finish	art.		A-DIN 7380-A2 M8x20	A19/04-PVC
AISI304	satin	A/4000-742	1x		

new

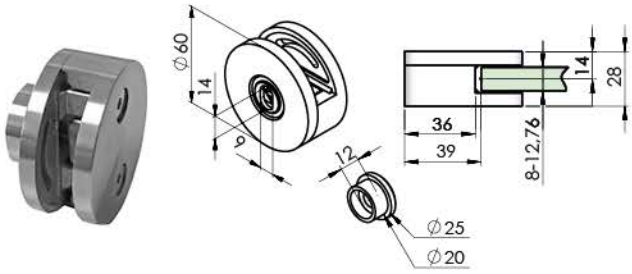

Quality	Finish	art.		A-DIN 7380-A2 M8x20	A19/04-PVC
AISI304	satin	A/4000-700	1x		

new

	glass t					
	8	8,76	10	10,76	12	12,76
	A19/4041-008	A19/4041-009	A19/4041-010	A19/4041-011	A19/4041-012	A19/4041-013

MODEL 21X

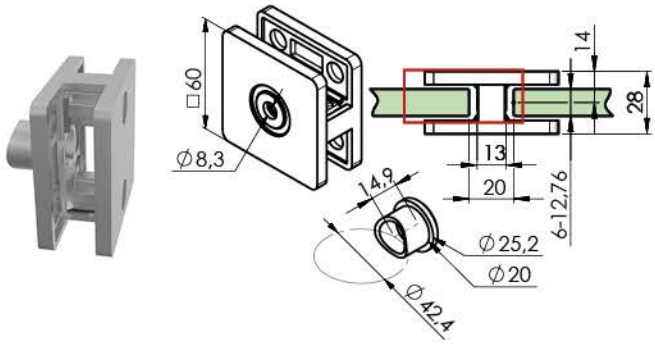

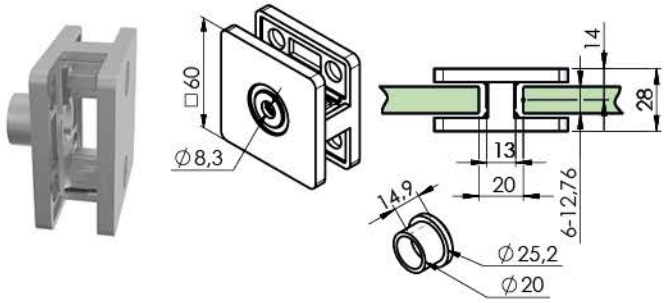

Quality	Finish	art.	A-DIN 7380-A2 M8x20	A19/04-PVC
AISI316	satin	A14/2100-742	1x	
	polish	A14/2100-742-L		

Quality	Finish	art.	A-DIN 7380-A2 M8x20	A19/04-PVC
AISI316	satin	A14/2100-700	1x	
	polish	A14/2100-700-L		

MODEL 21XX

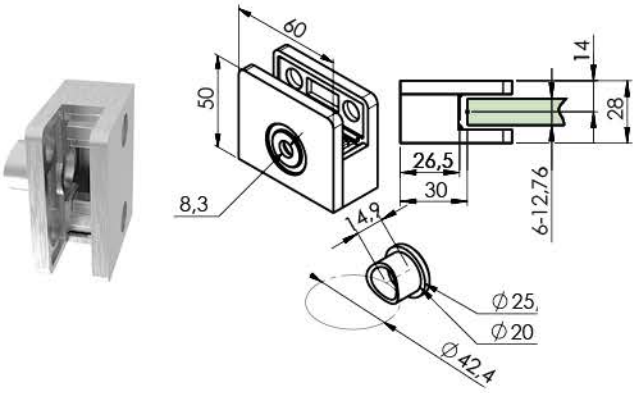

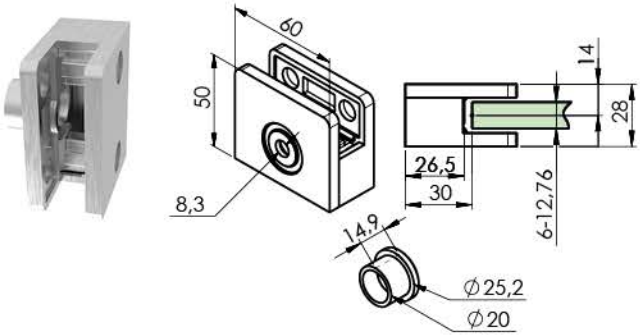

Quality	Finish	art.	A-DIN 7380-A2 M8x20	A19/04-PVC
AISI316	satin	A14/2110-742	1x	
	polish	A14/2110-742-L		

Quality	Finish	art.	A-DIN 7380-A2 M8x20	A19/04-PVC
AISI316	satin	A14/2110-700	1x	
	polish	A14/2110-700-L		

top

	glass t							
	6	6,76	8	8,76	10	10,76	12	12,76
	A19/21-706	A19/21-707	A19/21-708	A19/21-709	A19/21-710	A19/21-711	A19/21-712	A19/21-713

3.3 SHEET CLAMPS

plate t			
1,5	2	3	
A19/20-0015	A19/20-002	A19/20-003	MODEL 20

plate t			
1,5	2	3	
A19/21-0015	A19/21-002	A19/21-003	MODEL 21

plate t			
1,5	2	3	
A19/22-0015	A19/22-002	A19/22-003	MODEL 22

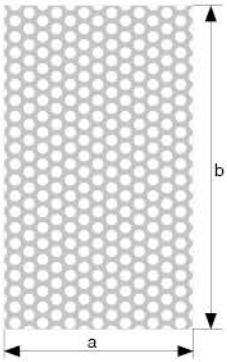

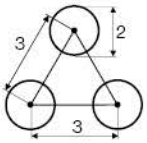

A/MR-2x3

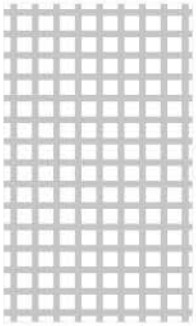

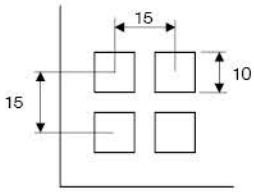

A/MR-10x15

Quality	Finish	art.	axb	t	
AISI304	satin	A/MR-2x3	1000x2000	1	new
		A/MR-10x15		2	new

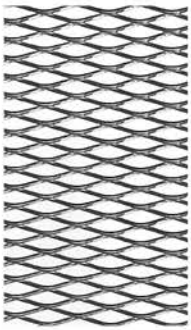

A/MR-28x13x2

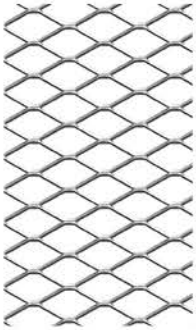

A/MR-62x20x3

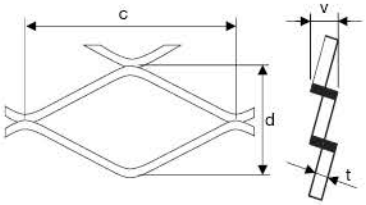

Quality	Finish	art.	axb	c	d	t	v	
AISI304	satin	A/MR-28x13x2	1000x2000	28	13	1	3,8	new
		A/MR-62x20x3		62	20	2	5,7	new

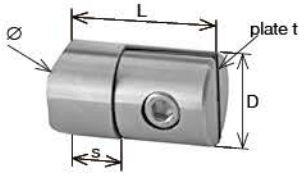

Quality	Finish	∅	art.	D	L	s	plate t
AISI304	satin	33,7	A/0743-033	25	40	15	1,5-4,0
		42,4	A/0743-042				
		48,3	A/0743-048				
AISI316		42,4	A14/0743-042				

Quality	Finish	∅	art.	D	L	s	plate t	
AISI304	satin	flat	A/0743-000	25	40	15	1,5-4,0	top
AISI316			A14/0743-000					

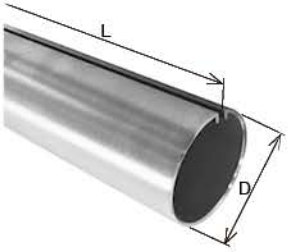

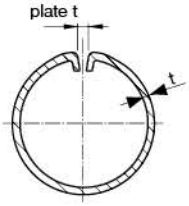

Quality	Finish	art.	D	L	plate t	t	
AISI304	satin	A/18-frame	18	3000	1,7	1,25	new
		A/20-frame	20		1,5 - 2	1,5	new
		A/27-frame	27		1,3		new

Quality	Finish	art.	Compatibility	
AISI304	satin	A/18-G90	A/18-frame	new
		A/27-G90	A/27-frame	new

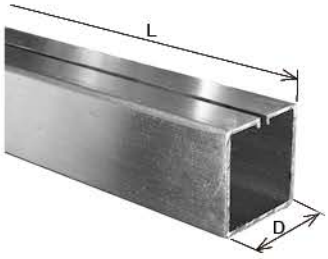

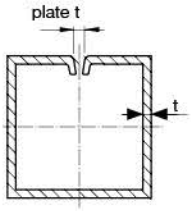

Quality	Finish	art.	D	plate t	t	L	
AISI304	satin	A/20x20x2-frame	20x20	1,5	1,2	3000	new
		A/30x30x4-frame	30x30	4	1,5		new
		A/30x30x7,5-frame	30x30	7,5			new

Quality	Finish	art.	Compatibility	
AISI304	satin	A/20x30x2-G90	A/20x30x2-frame	new

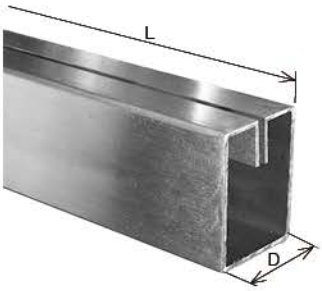

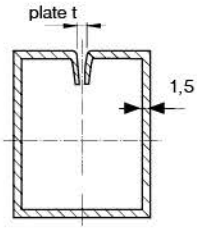

Quality	Finish	art.	D	plate t	L	
AISI304	satin	A/20x30x2-frame	20x30	1,7	3000	new

4 COMPONENTS

4.4 HANDRAIL HOLDERS

4.5 CROSSBAR HOLDERS

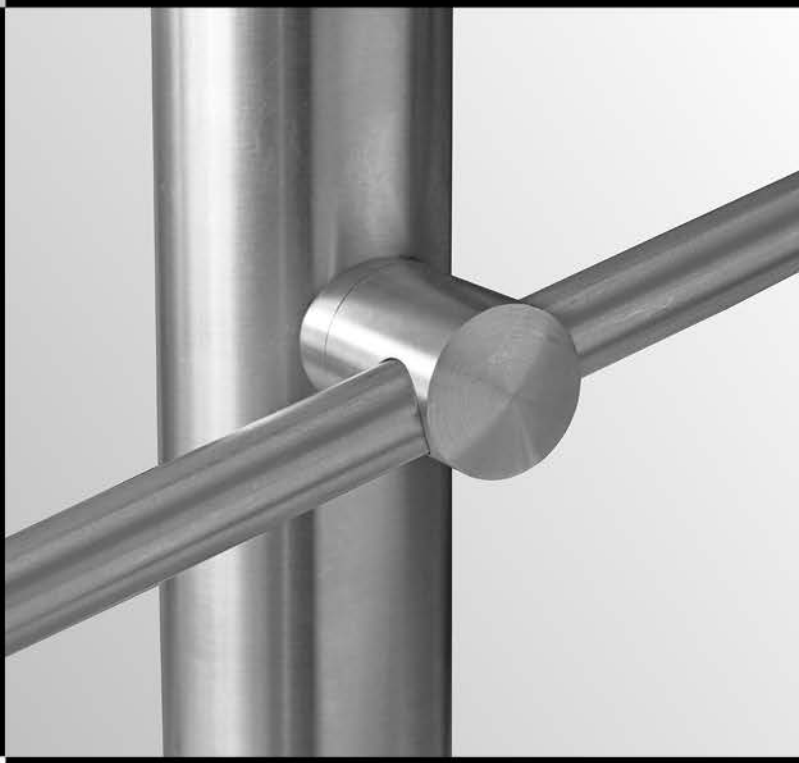

umakov®
PRODUCT/SYSTEM/DESIGN

umakov®
PRODUCT/SYSTEM/DESIGN

umakov®
PRODUCT/SYSTEM/DESIGN

4.1 CABLE SYSTEM

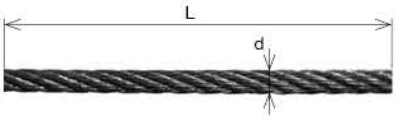

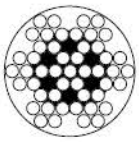

Quality	Finish	art.	d	L (m)	
AISI316	raw	A14/7900-003-012	3	12,5	
		A14/7900-003-025		25	
		A14/7900-003-050		50	
		A14/7900-003-100		100	
		A14/7900-003-200		200	
AISI316	raw	A14/7900-004-012	4	12,5	
		A14/7900-004-025		25	
		A14/7900-004-050		50	
		A14/7900-004-100		100	
		A14/7900-004-200		200	
AISI316	raw	A14/7900-005-012	5	12,5	
		A14/7900-005-025		25	top
		A14/7900-005-050		50	
		A14/7900-005-100		100	
		A14/7900-005-200		200	

Quality	Finish	art.	d	L (m)	
AISI316	raw	A14/7900-006-012	6	12,5	
		A14/7900-006-025		25	
		A14/7900-006-050		50	
		A14/7900-006-100		100	
		A14/7900-006-200		200	
AISI316	raw	A14/7900-008-012	8	12,5	new
		A14/7900-008-025		25	new
		A14/7900-008-050		50	new
		A14/7900-008-100		100	new
		A14/7900-008-200		200	new

CABLE SYSTEM

SYSTEM FIX

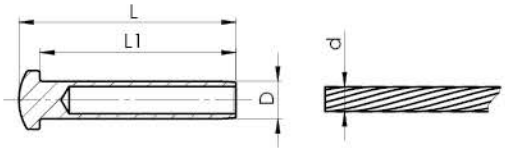

Quality	Finish	art.	D1	L1	D	L	d	
AISI316	satin	A14/7370-003	3,5	32	5,5	35	3	
		A14/7370-004	4,4		6,3		4	new
		A14/7370-005	5,3	37	7,5	41	5	
		A14/7370-006	6,5	47	9	52	6	

Quality	Finish	art.	d2	M	D
AISI304	satin	A/7350-003	6,0	6	13
		A/7350-003-B	6,0	6	13
		A/7350-005	9,5	10	20
AISI316		A14/7350-003	6,0	6	12
		A14/7350-005	9,5	10	20

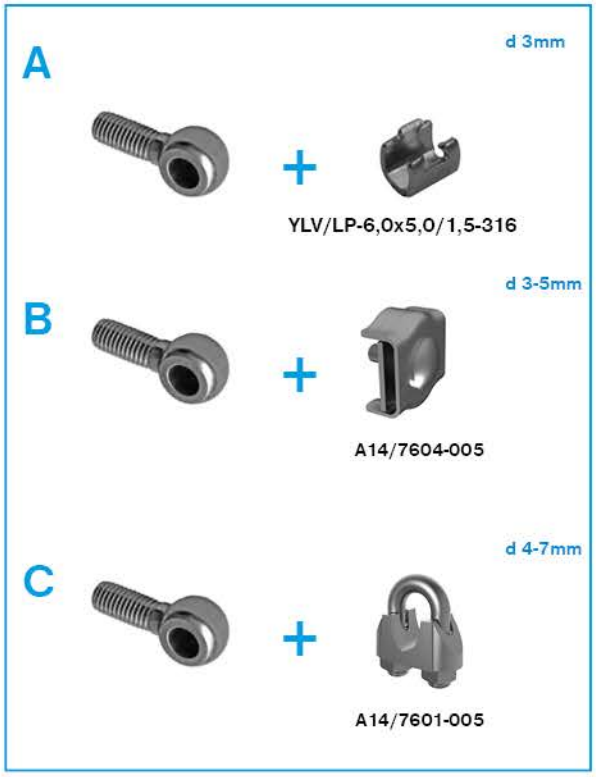

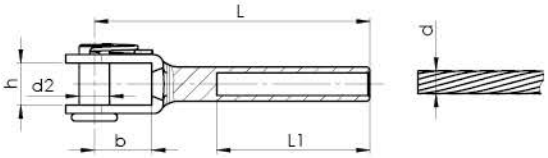

Quality	Finish	art.	d	h	b	L	L1	d2
AISI316	satin	A14/7330-003	3	7,5	12	50	25	4,8
		A14/7330-004	4					
		A14/7330-005	5	9,6	13	58	30	5,8
		A14/7330-006	6	11	15	72	40	7,8

new

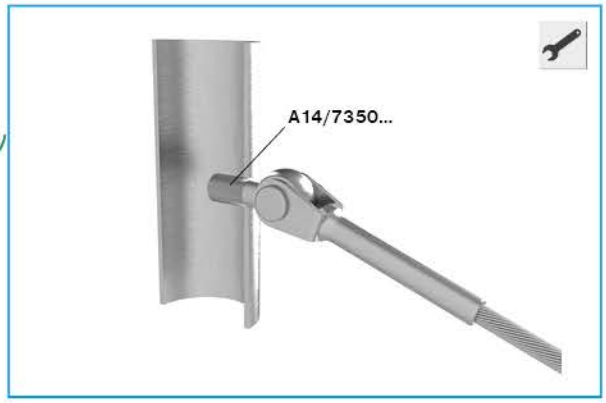

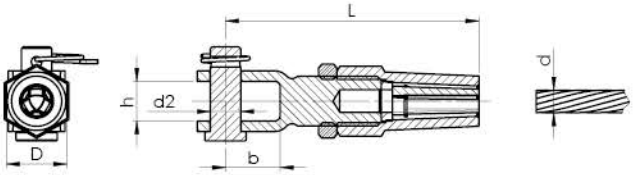

Quality	Finish	art.	d	D	L	d2	b	h
AISI316	satin	A14/7300-003	3	12	51	5	13	8
		A14/7300-005	4-5	16	65	8	15	10

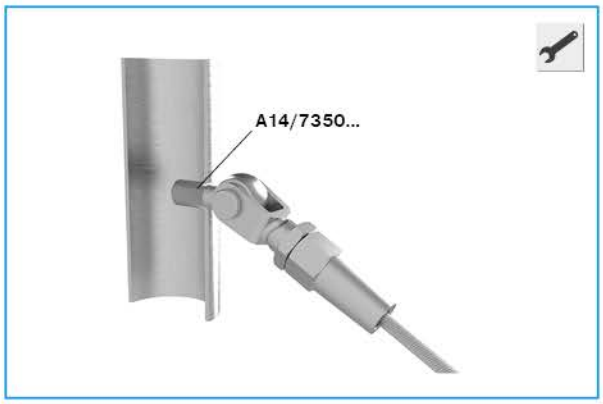

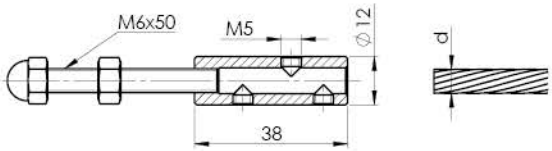

Quality	Finish	art.	d
AISI304	satin	A5/L6	4-6
AISI316		A14/L6	4-6

top

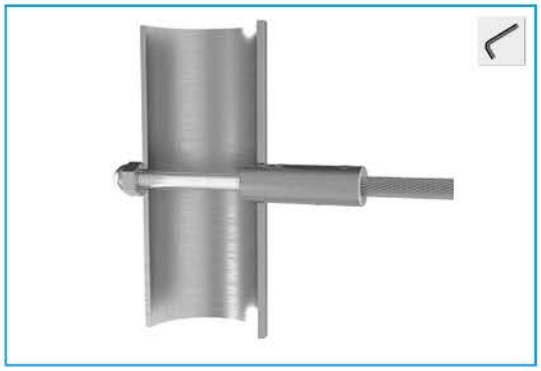

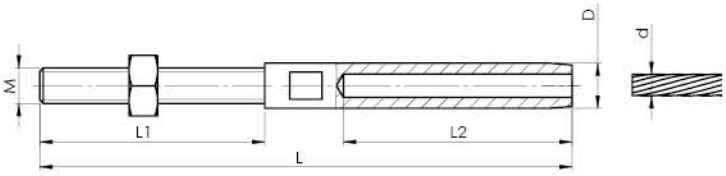

Quality	Finish	art.	d	D	L2	L1	M	L	Tread
AISI316	satin	A14/L5-3	3	6,35	38	48	6	100	right
		A14/L5-4	4	7,5	45	48	6	108	
		A14/L5-5	5	9	51	63	10	132	
		A14/L5-6	6	12,5	64	63	10	146,5	
		A14/L5-8	8	16	83	80	12	180	
		A14/L5-3-LEFT	3	6,35	38	48	6	100	left
		A14/L5-4-LEFT	4	7,5	45	48	6	108	
		A14/L5-5-LEFT	5	9	51	63	10	132	
		A14/L5-6-LEFT	6	12,5	64	63	10	146,5	

new

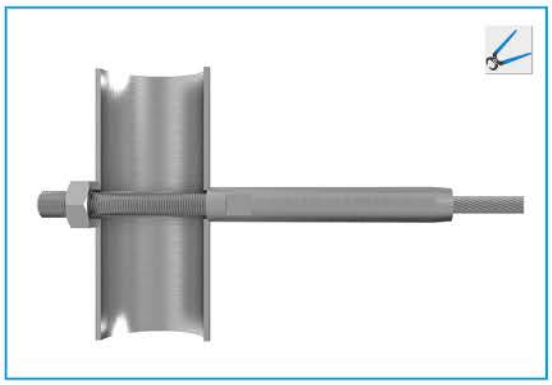

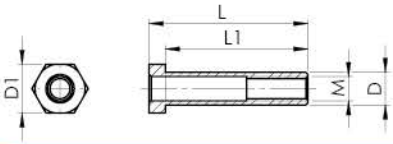

Quality	Finish	art.	D1	L1	D	L	M
AISI316	satin	A14/7360-M6	13	35	8	39	6
		A14/7360-M10	17	45	13	50	10

new

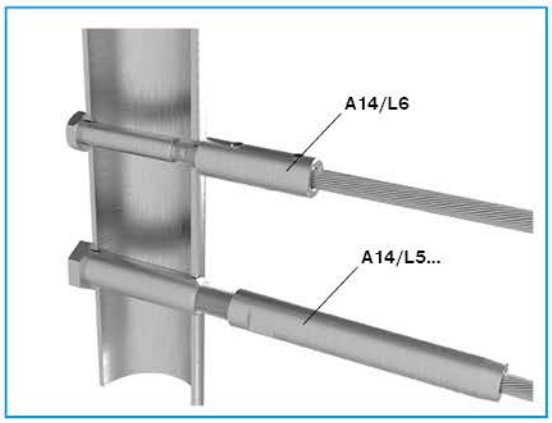

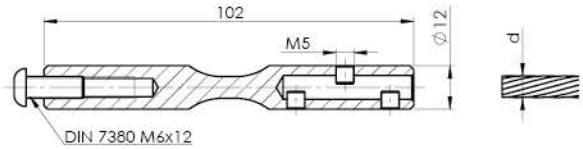

Quality	Finish	art.	d
AISI304	satin	A5/L6-V	4-6
AISI316		A14/L6-V	

top

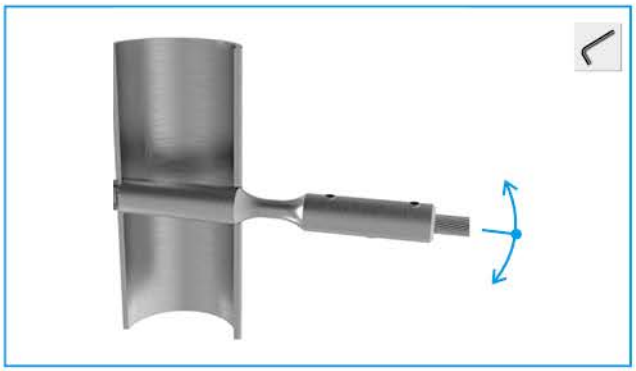

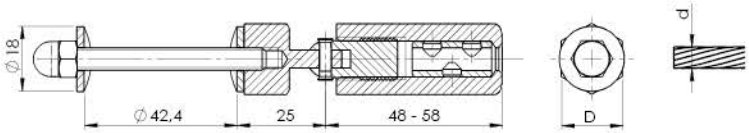

Quality	Finish	art.	d	D
AISI304	satin	A5/L7-6	4-5	17
		A5/L7-8	5-8	19

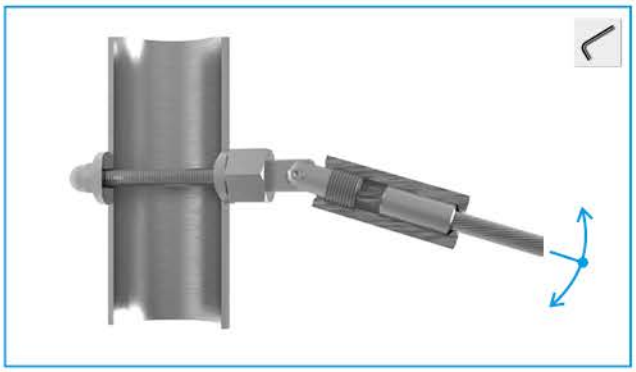

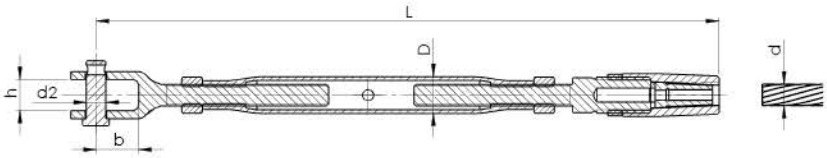

Quality	Finish	art.	d	D	L	h	b	d2
AISI304	satin	A/7250-003	3	10,5	160 - 220	7,5	12	6
		A/7250-005	4-5	17,5	230 - 340	10,3	13	8,5
AISI316		A14/7250-003	3	8	140 - 200	7,5	12	5
		A14/7250-005	5	13,5	230 - 340	10,3	13	8

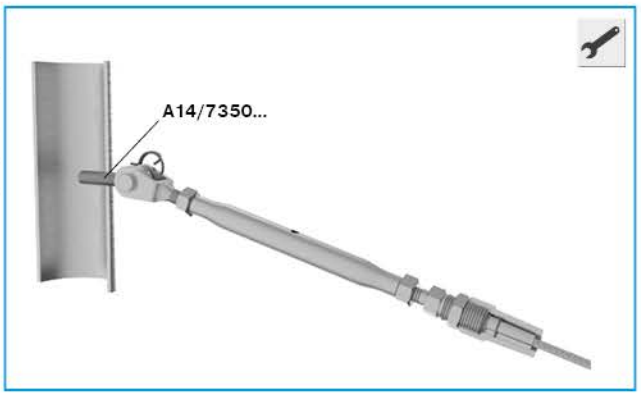

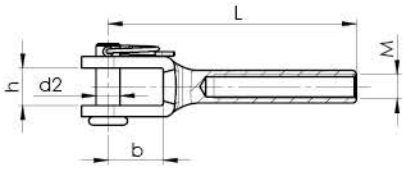

Quality	Finish	art.	M	b	h	L	d2
AISI316	satin	A14/7330-M6	6	13,5	9	61	5,9
		A14/7330-M10	10	20	12	73	9

new

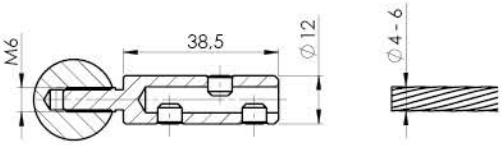

Quality	Finish	art.
AISI304	satin	A5/L6-G
AISI316		A14/L6-G

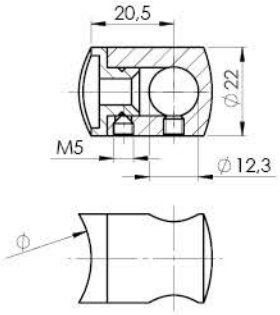

Quality	Finish	∅	art.
AISI304	satin	42,4	A/0830-042
		flat	A/0830-000
AISI316		42,4	A14/0830-042
		flat	A14/0830-000

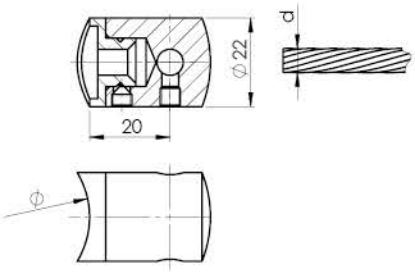

Quality	Finish	∅	art.	d
AISI304	satin	42,4	A17/442-3	3
		42,4	A17/442	6
		flat	A17/400	
AISI316		42,4	A14/442	

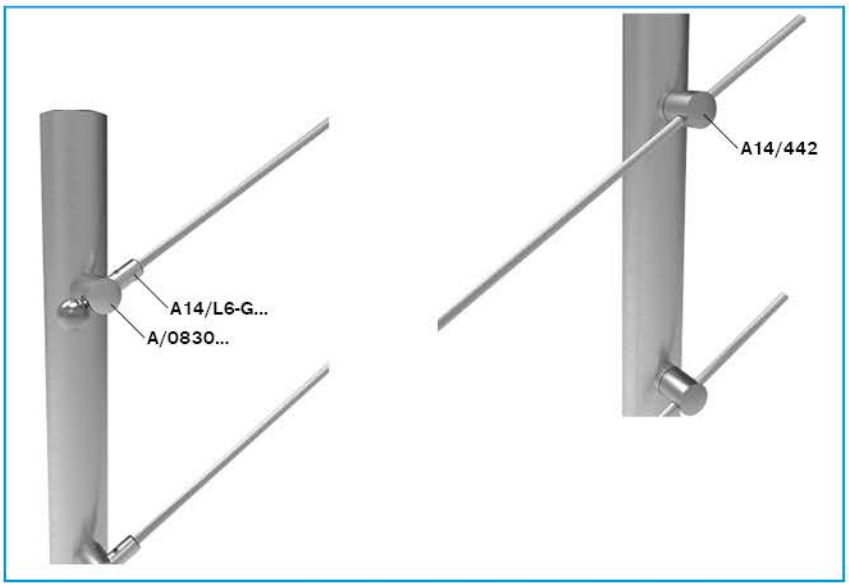

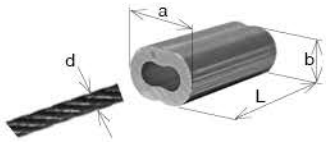

Material	effect	art.	d	L	a	b
ALUMINIUM	raw	AL/7405-003	3	15	11	7
		AL/7405-004	4	16	14	9
		AL/7405-005	5	22	17	11
		AL/7405-006	6	26	19	12
		AL/7405-008	8	32	27	17

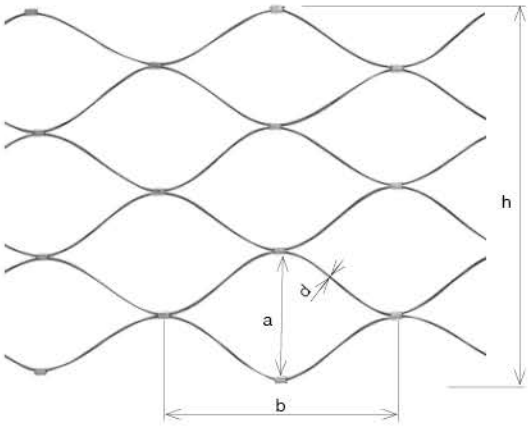

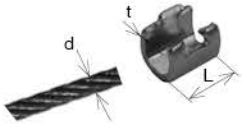

Quality	Finish	art.	a	b	h	d
AISI316	satin	YLV/LV-70x120x1,5-316	70	120	800	1,5

Quality	Finish	art.	d	t	L
AISI316	natural	YLV/LP-6,0x5,0/1,5-316	3	0,5	7

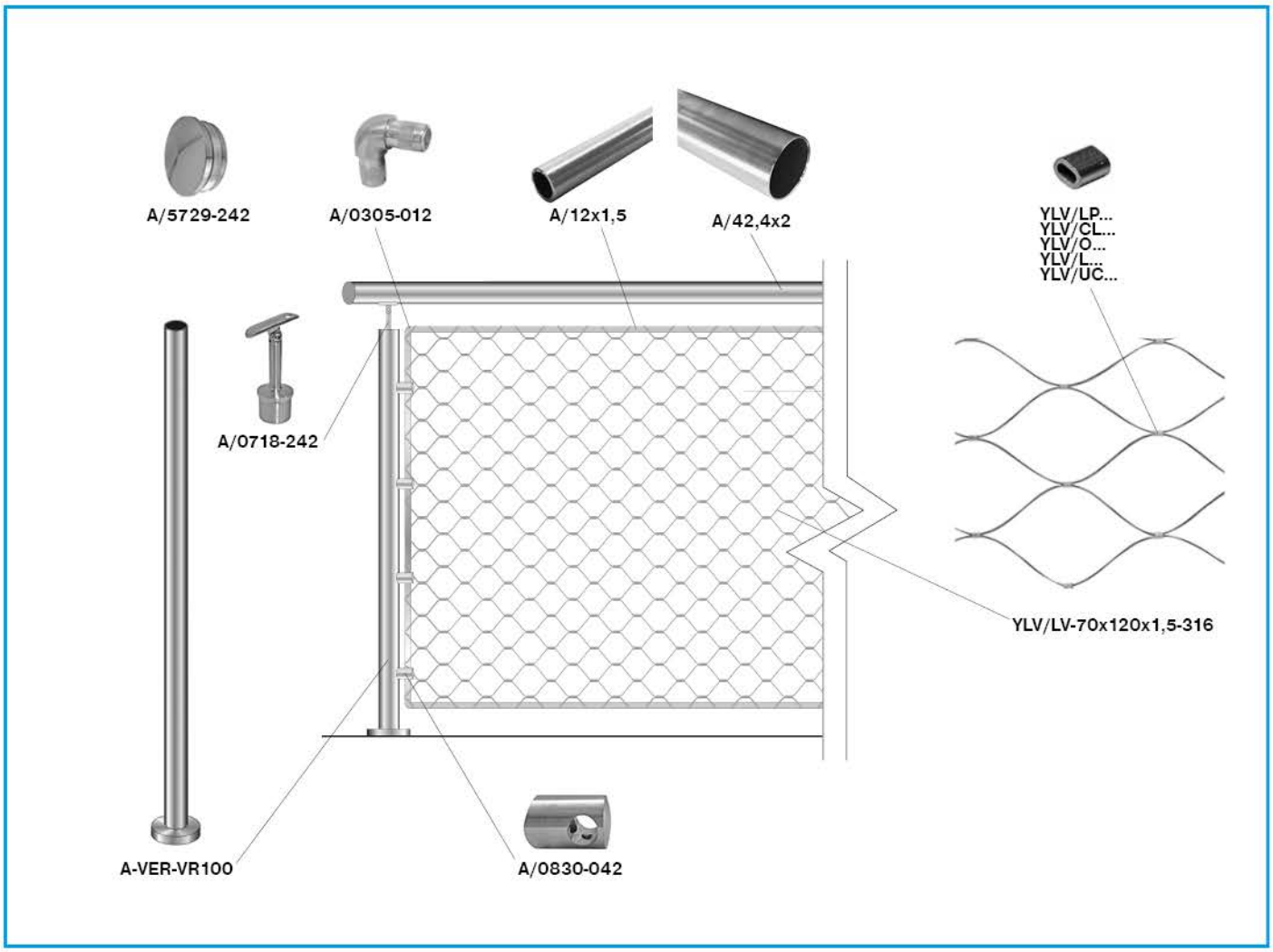

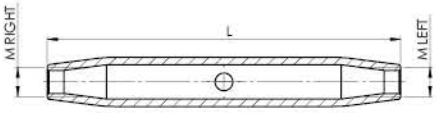

Quality	Finish	art.	L	M
AISI316	satin	A14/7605-M6	90	6
		A14/7605-M10	120	10

new

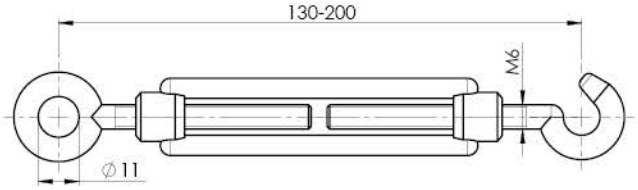

Quality	Finish	art.
AISI316	raw	A14/7500-010

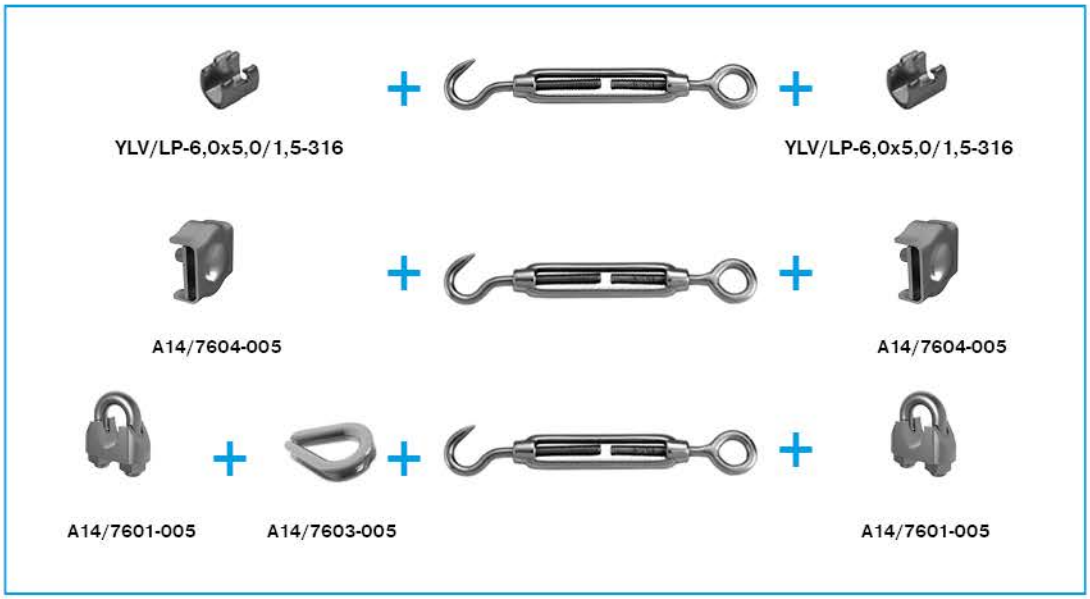

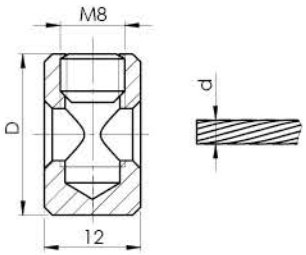

Quality	Finish	art.	d	D
AISI304	satin	A/7400-003	3	18
		A/7400-005	3-6	20
AISI316		A14/7400-003	3	18
		A14/7400-005	3-6	20

top

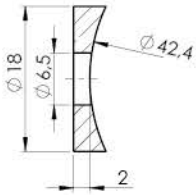

Quality	Finish	art.
AISI316	satin	A14/012-02

new

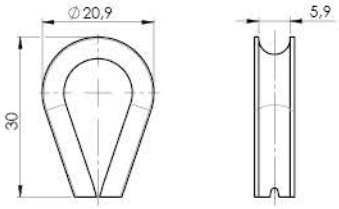

Quality	Finish	art.
AISI316	satin	A14/7603-005

new

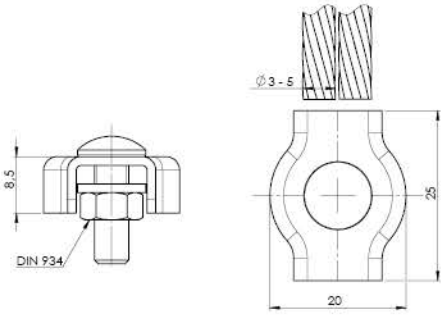

Quality	Finish	art.
AISI316	satin	A14/7604-005

new

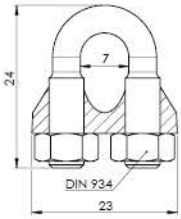

Quality	Finish	art.
AISI316	satin	A14/7601-005

new

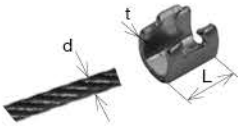

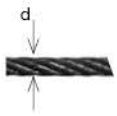

Quality	Finish	art.	d	t	L
AISI316	natural	YLV/LP-6,0x5,0/1,5-316	3	0,5	7

art.	d
Q8/95	3-8

CABLE SYSTEM

4.2 HANDRAILS

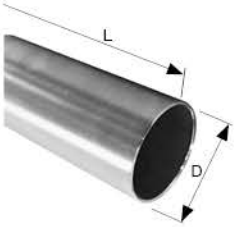

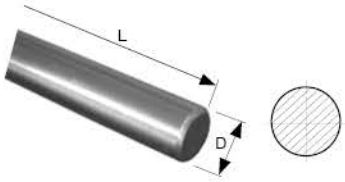

Quality	Finish	art.	D	t	L	
AISI304	satin	A/10x1-3000	10	1	3000	
		A/10x1-6000			6000	
		A/12x1-3000	12		3000	new
		A/12x1-6000			6000	new
		A/12x1,5-3000	12	1,5	3000	
		A/12x1,5-6000			6000	top
		A/14x1,5-3000	14		3000	
		A/14x1,5-6000			6000	
		A/16x1,5-3000	16		3000	
		A/16x1,5-6000			6000	
AISI304	satin	A/20x1,5-3000	20		3000	
		A/20x1,5-6000			6000	
		A/25x2-2000	25	2	2000	new
		A/25x2-6000			6000	
		A/33,7x2-3000	33,7		3000	
		A/33,7x2-6000			6000	
AISI304	satin	A/42,4x1,5-3000	42,4	1,5	3000	new
		A/42,4x1,5-6000			6000	new
		A/42,4x2-1500		2	1500	
		A/42,4x2-1500-EXCLUSIVE				new
		A/42,4x2-2000			2000	
		A/42,4x2-2000-EXCLUSIVE				new
		A/42,4x2-3000			3000	
		A/42,4x2-3000-EXCLUSIVE				new
		A/42,4x2-6000			6000	top
		A/42,4x2-6000-EXCLUSIVE				new
		A/48,3x2-3000	48,3		3000	
		A/48,3x2-6000			6000	
AISI304	polish	A/12x1,5-3000-L	12	1,5	3000	
		A/12x1,5-6000-L			6000	
		A/42,4x2-1500-L	42,4	2	1500	
		A/42,4x2-3000-L			3000	
		A/42,4x2-6000-L			6000	
AISI316	satin	A14/12x1,5-3000	12	1,5	3000	
		A14/12x1,5-6000			6000	
		A14/42,4x2-3000	42,4	2	3000	
		A14/42,4x2-6000			6000	

Quality	Finish	art.	D	L	
AISI304	satin	A/8-3000	8	3000	new
		A/12-3000	12		
		A/12-6000	12	6000	
		A/20-6000	20		new

General tolerances
T3/D3 EN 10217-7
(t ±10%, max ±0,2mm;
D ±0,75%, max ±0,3mm)

HANDRAILS

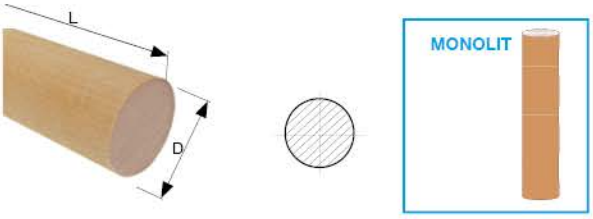

Quality	Finish	art.	D	L	
Beech	natural	WB/D42-L1200	42	1200	
		WB/D42-L1600		1600	
		WB/D42-L2000		2000	
		WB/D42-L2500		2500	
		WB/D42-L3000		3000	top
		WB/D42-L4000		4000	new
		WB/D50-L2000	49	2000	
		WB/D50-L2500		2500	
		WB/D50-L3000		3000	
Oak	natural	WD/D42-L1200	42	1200	
		WD/D42-L1600		1600	
		WD/D42-L2000		2000	
		WD/D42-L2500		2500	
		WD/D42-L3000		3000	
		WD/D42-L4000		4000	new
		WD/D50-L2000	49	2000	
		WD/D50-L2500		2500	
		WD/D50-L3000		3000	

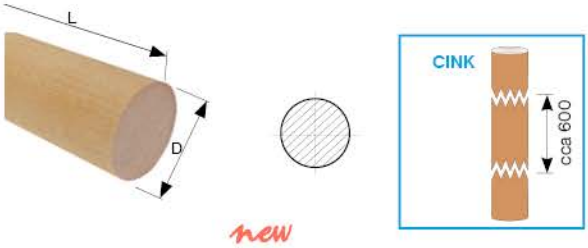

new

Quality	Finish	art.	D	L	
Beech	natural	WB/D42-L2000-CINK	42	2000	new
		WB/D42-L2500-CINK		2500	new
		WB/D42-L3000-CINK		3000	new
		WB/D42-L4000-CINK		4000	new

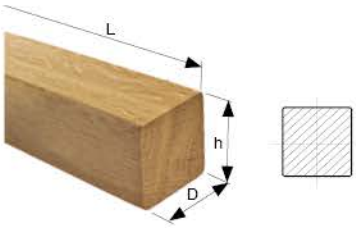

Quality	Finish	art.	D	h	L
Beech	natural	WB/40x40-L2000	40	40	2000
		WB/40x40-L2500			2500
		WB/40x40-L3000			3000
		WB/40x40-L4000			4000
Oak		WD/40x40-L2000			2000
		WD/40x40-L2500			2500
		WD/40x40-L3000			3000
		WD/40x40-L4000			4000

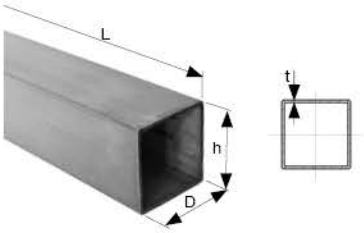

Quality	Finish	art.	D	h	t	L	
AISI304	satin	A/10x10x1-6000	10	10	1	6000	
		A/12x12x1-6000	12	12			
		A/20x20x1,5-6000	20	20	1,5		
		A/25x25x2-6000	25	25	2		
		A/30x30x2-6000	30	30			
		A/40x40x2-1500	40	40		1500	
		A/40x40x2-2000	40	40		2000	new
		A/40x40x2-3000	40	40		3000	
		A/40x40x2-6000	40	40		6000	
		A/60x60x2-6000	60	60			
		A/80x80x2-6000	80	80			top
		A/100x100x3-6000	100	100	3		new
	polish	A/40x40x2-6000-L	40	40	2		new
AISI316	satin	A14/40x40x2-6000	40	40			

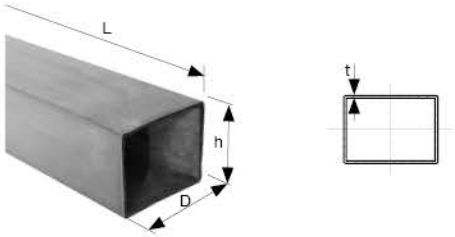

Quality	Finish	art.	D	h	t	L
AISI304	satin	A/40x20x2-6000	40	20	2	6000
		A/50x30x2-6000	50	30		
		A/60x40x2-6000	60	40		

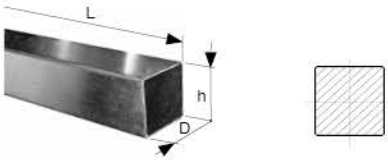

Quality	Finish	art.	D	h	L	
AISI304	satin	A/10x10-3000	10	10	3000	
		A/10x10-6000	10	10	6000	
		A/12x12-6000	12	12		new

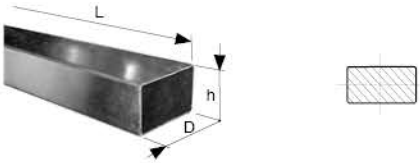

Quality	Finish	art.	D	h	L	
AISI304	satin	A/15x5-2000	15	5	2000	new
		A/15x5-3000			3000	new
		A/15x5-4000			4000	
		A/20x5-6000	20		6000	
		A/25x5-6000	25			
		A/30x5-6000	30			
		A/40x5-6000	40			top
		A/50x5-6000	50			new
		A/60x5-6000	60			new

HANDRAILS

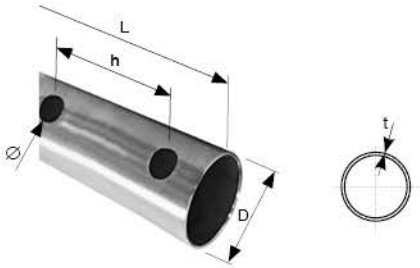

Quality	Finish	art.	D	t	L	h	∅
AISI304	satin	A/42,4x2-10x12-1300	42,4	2	1300	132	12,3
		A/42,4x2-15x12-2000			2000		
		A/42,4x2-H-atyp					

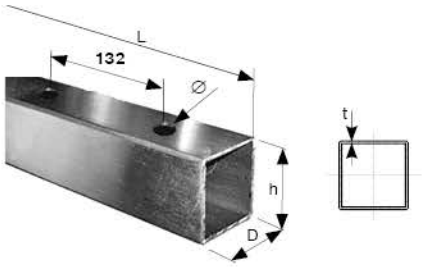

Quality	Finish	art.	D	h	L	∅	
AISI304	satin	A/40x40x2-15x12-2000	40	40	1300	12,3	new

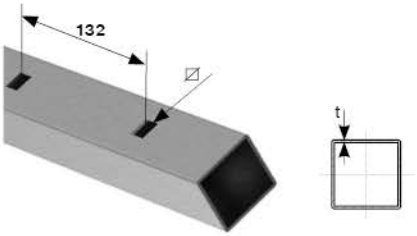

Quality	Finish	art.	D	h	L	⊠	
AISI304	satin	A/40x40x2-15x10x10-2000	40	40	2000	10x10	new
		A/40x40x2-15x12x12-2000				12x12	new

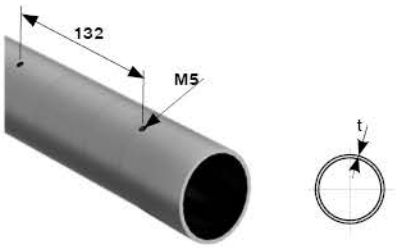

Quality	Finish	art.	D	t	L
AISI304	satin	A/33,7x2-15xM5-2000	33,7	2	2000
		A/42,4x2-15xM5-2000	42,4		

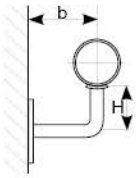

Quality	Finish	∅	art.	L	b x H	A/0111-042	A/5729-242	A-DIN 7380-A2 M5x12
AISI304	satin	42,4x2	A/M-1500	1500	75x50	2x	2x	4x
			A/M-2000	2000		2x	2x	4x
			A/M-3000	3000		3x	2x	6x
			A/M-6000	6000		5x	2x	10x

new

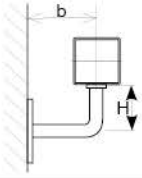

Quality	Finish	D x h	art.	L	b x H	A/0111-000	A/4732-040	A-DIN 7380-A2 M5x12
AISI304	satin	40 x 40	AJP/M-1500	1500	75x50	2x	2x	4x
			AJP/M-2000	2000		2x	2x	4x
			AJP/M-3000	3000		3x	2x	6x
			AJP/M-6000	6000		5x	2x	10x

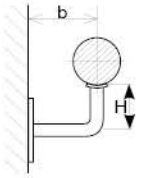

Quality	Finish	∅	art.	L	b x H	A/0111-042	A-PH 5x20
Beech	natural	42,4x2	WB/M-2000	2000	75x50	2x	4x
			WB/M-3000	3000		4x	8x
			WB/M-4000	4000		5x	10x
Oak			WD/M-2000	2000		2x	4x
			WD/M-3000	3000		4x	8x
			WD/M-4000	4000		5x	10x

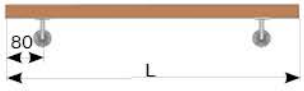

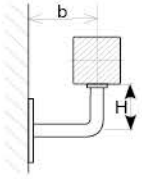

Quality	Finish	D x h	art.	L	b x H	A/0111-000	A-PH 5x20
Beech	natural	40 x 40	WBJP/M-2000	2000	75x50	2x	4x
			WBJP/M-3000	3000		4x	8x
			WBJP/M-4000	4000		5x	10x
Oak			WDJP/M-2000	2000		2x	4x
			WDJP/M-3000	3000		4x	8x
			WDJP/M-4000	4000		5x	10x

not assembled

4.3 LED HANDRAILS

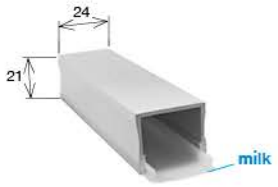

Material	Effect	art.	L
ALUMINIUM	ELOX	AL/24x21-LED	1250

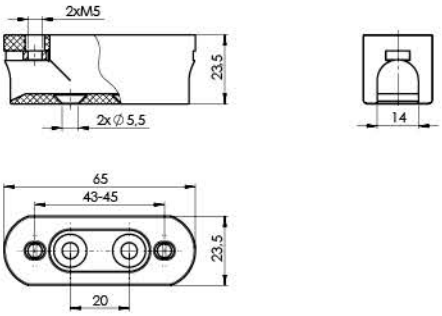

Quality	Finish	art.
PVC	Black	A19/PD-LED

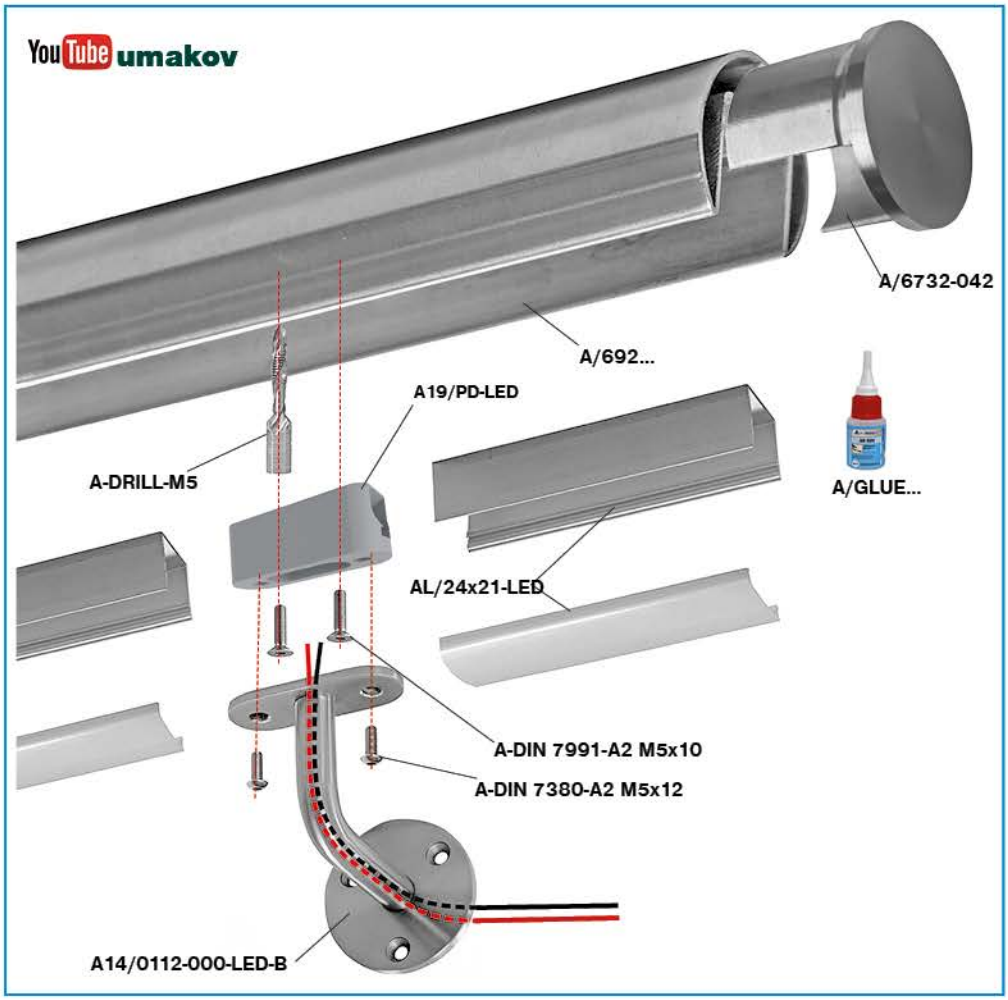

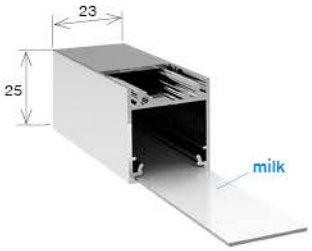

Material	Effect	art.	L
ALUMINIUM	raw	AL/23x25-LED	1250

new

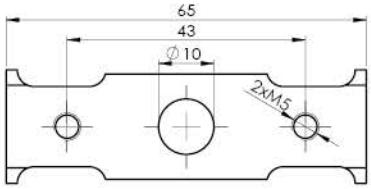

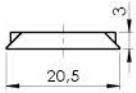

Material	Effect	art.
AISI316	raw	A14/PD-LED-23x25

new

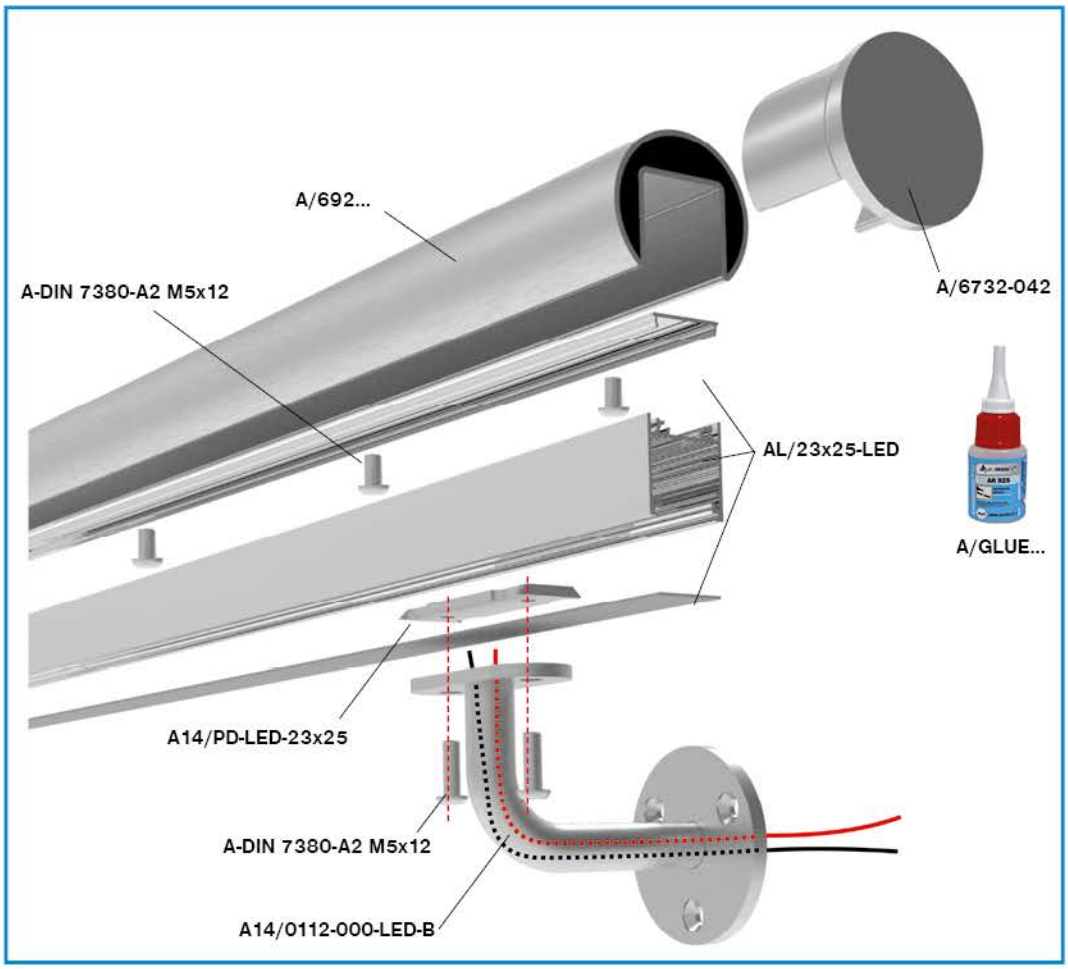

Quality	Finish	Color	art.	a x b
PVC + SILICONE	white	5000K	LED/24x24	24 x 24

new

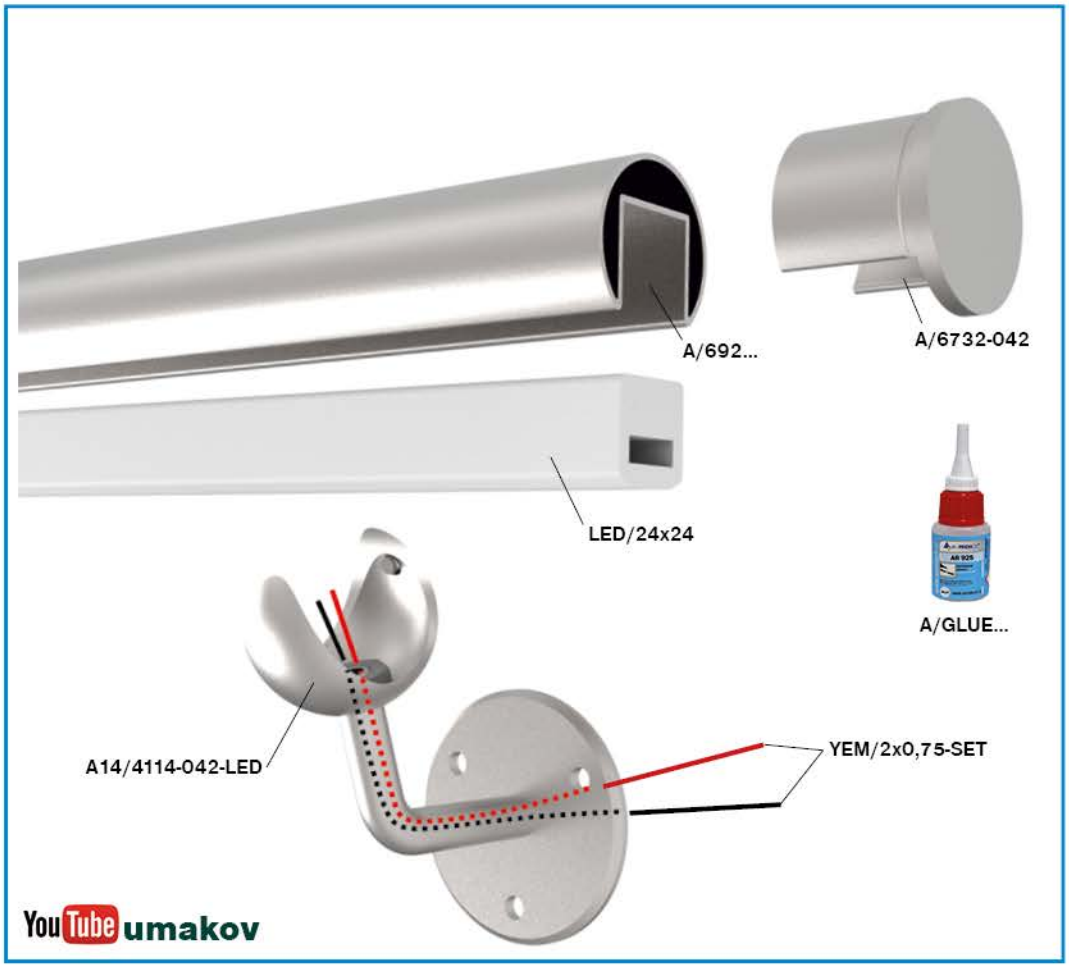

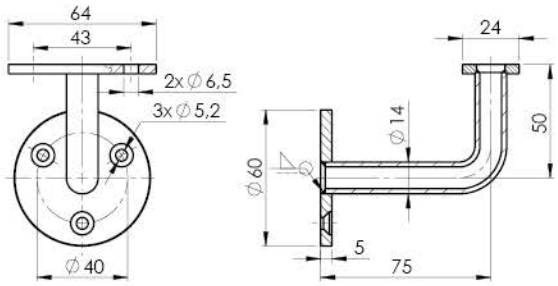

Quality	Finish	art.
AISI316	satin	A14/0112-000-LED-B

new

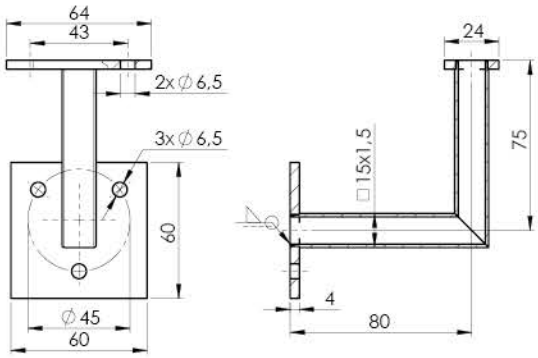

Quality	Finish	art.
AISI304	satin	A/4111-000-LED

new

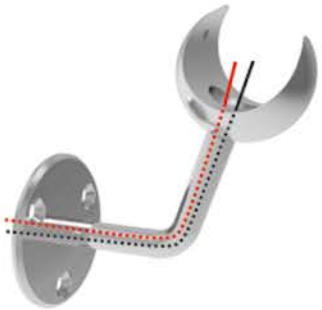

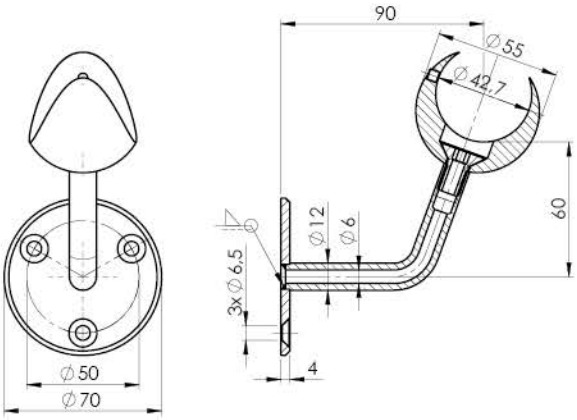

Quality	Finish	art.
AISI316	satin	A14/4114-042-LED

new

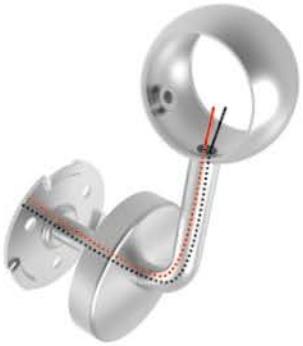

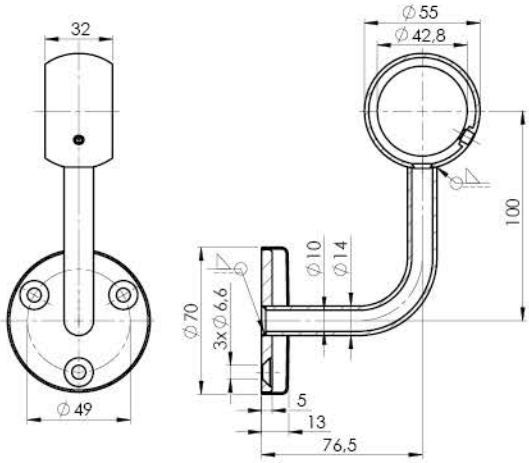

Quality	Finish	art.
AISI304	satin	A/0110-42-55-35-LED

new

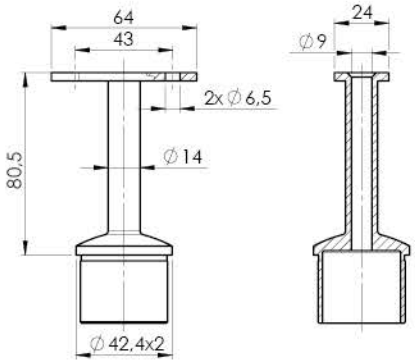

Quality	Finish	art.
AISI304	satin	A/0710-242-LED

new

art.	L(m)
YEM/2x0,75-SET	0,75

4.4 HANDRAIL HOLDERS

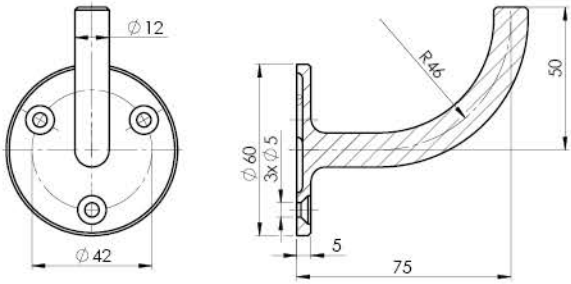

Quality	Finish	art.
AISI304	satin	A/0113-000-R
AISI316		A14/0113-000

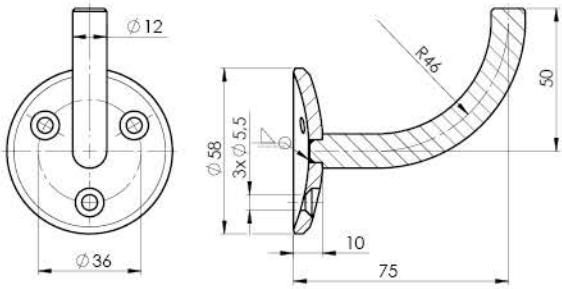

Quality	Finish	art.
AISI304	satin	A/0113-000

top

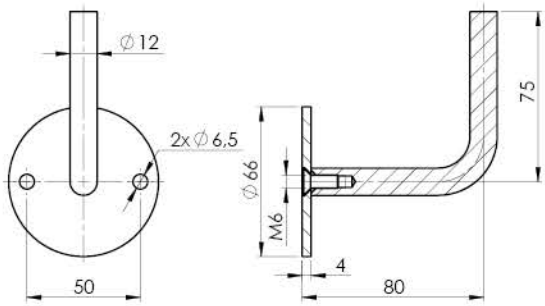

Quality	Finish	art.
AISI304	satin	A/0114-266-Z

≥80

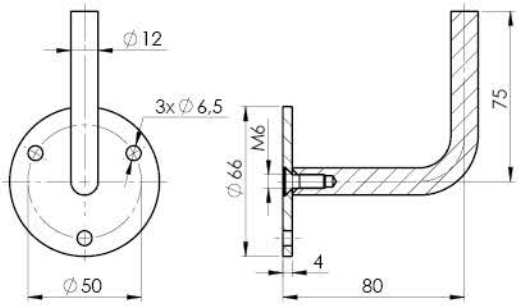

Quality	Finish	art.
AISI304	satin	A/0114-366-Z

≥80

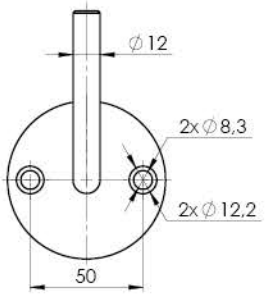

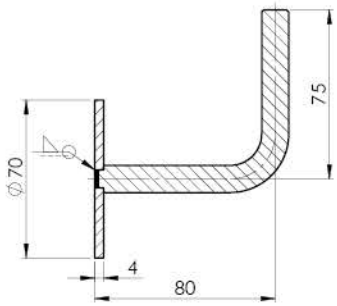

Quality	Finish	art.
AISI304	satin	A/0118-270

new

≥80

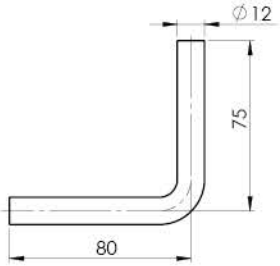

Quality	Finish	art.
AISI304	satin	A/0132-000

≥80

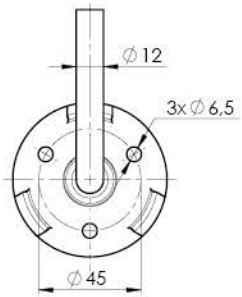

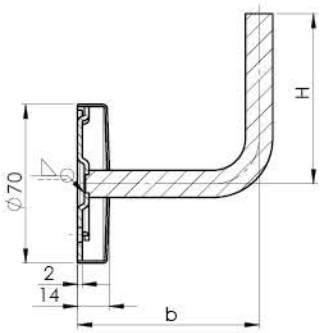

Quality	Finish	art.	b x H
AISI304	satin	A/0110-370-Z	80x75
		A/0110-000-Z	73x71

≥80

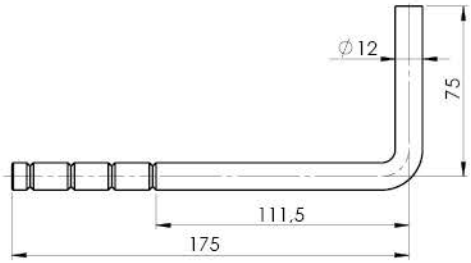

Quality	Finish	art.
AISI304	satin	A/0120-000-Z

≥80

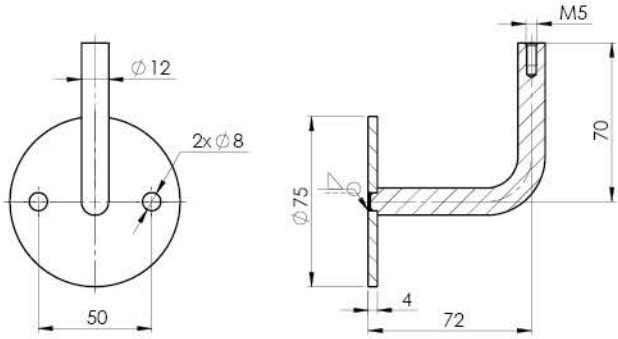

Quality	Finish	art.
AISI304	satin	A/0114-000

top

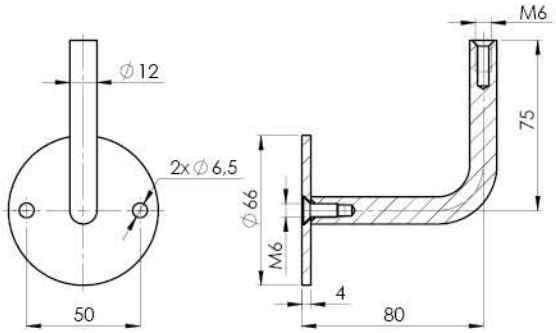

Quality	Finish	art.
AISI304	satin	A/0114-266-M6

≥80

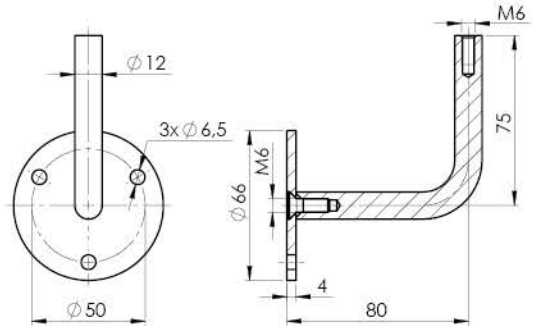

Quality	Finish	art.
AISI304	satin	A/0114-366-M6

≥80

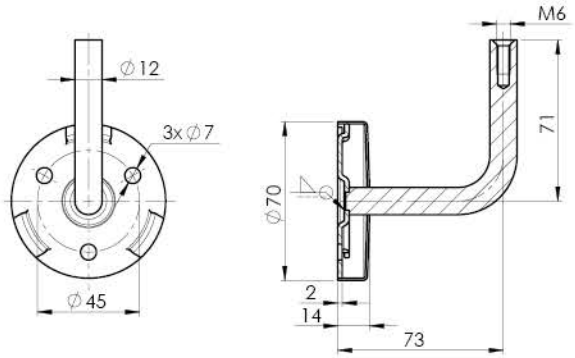

Quality	Finish	art.
AISI304	satin	A/0110-000

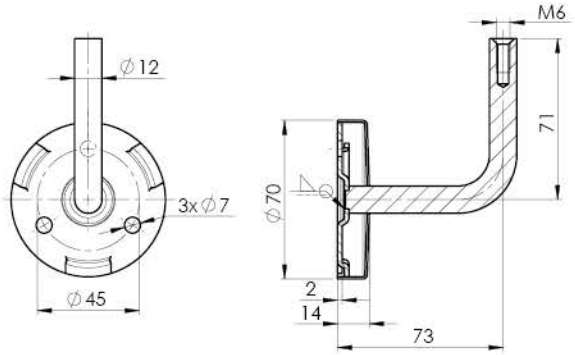

Quality	Finish	art.
AISI304	satin	A/0110-000-B

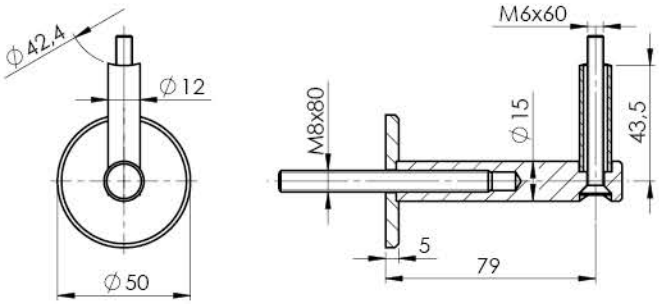

Quality	Finish	art.
AISI304	satin	A/0134-042

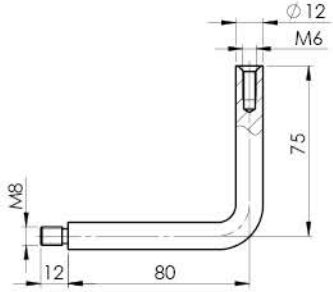

Quality	Finish	art.
AISI304	satin	A/0130-M6

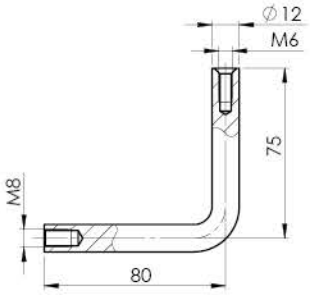

Quality	Finish	art.
AISI304	satin	A/0131-M6

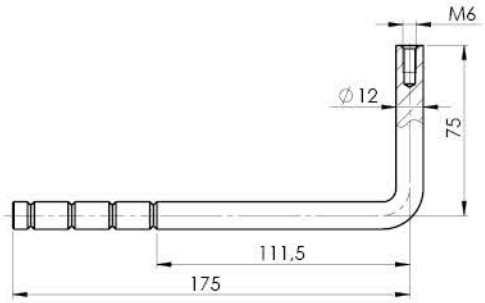

Quality	Finish	art.
AISI304	satin	A/0120-000-M6

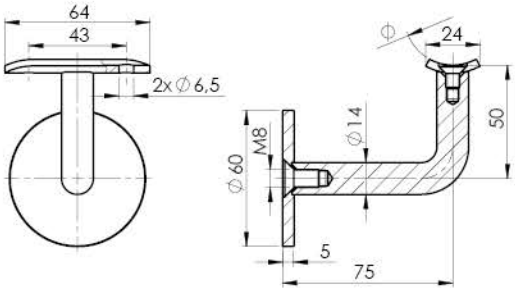

Quality	Finish	∅	art.
AISI304	satin	33,7	A/0111-033
		42,4	A/0111-042
		48,3	A/0111-048
	polish	42,4	A/0111-042-L
AISI316	satin	42,4	A14/0111-042

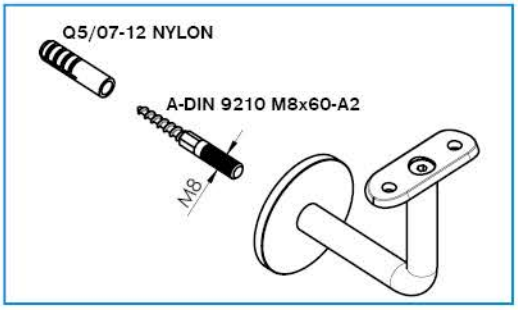

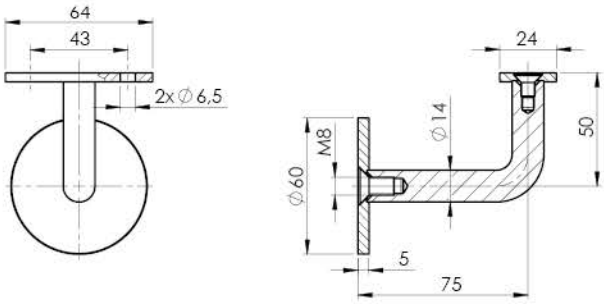

Quality	Finish	art.
AISI304	satin	A/0111-000

top

HANDRAIL HOLDERS

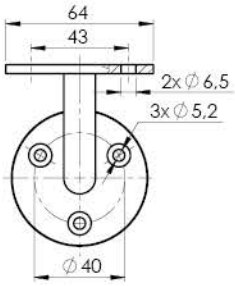

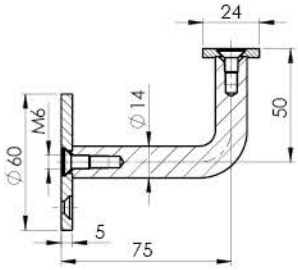

Quality	Finish	art.
AISI304	satin	A/0112-000
AISI316		A14/0112-000

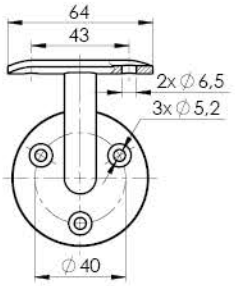

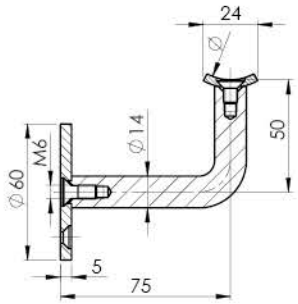

Quality	Finish	∅	art.
AISI304	satin	33,7	A/0112-033
		42,4	A/0112-042
		48,3	A/0112-048
	polish	42,4	A/0112-042-B-L
			A/0112-042-L
AISI316	satin	42,4	A14/0112-042
		48,3	A14/0112-048
	polish	42,4	A14/0112-042-L

top

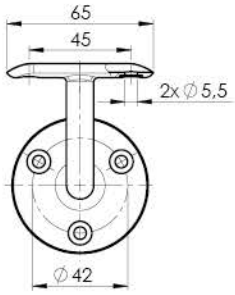

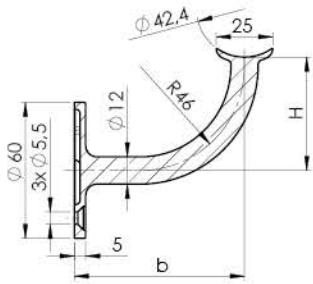

Quality	Finish	art.	b x H
AISI304	satin	A/0112-042-A	75x50
		A/0112-042-B	72x50
AISI316	polish	A14/0112-042-A	75x50
		A14/0112-042-A-L	
		A14/0112-042-B-L	

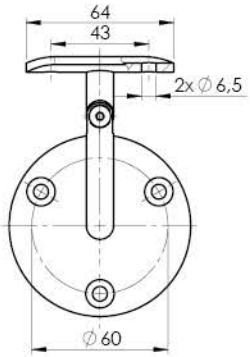

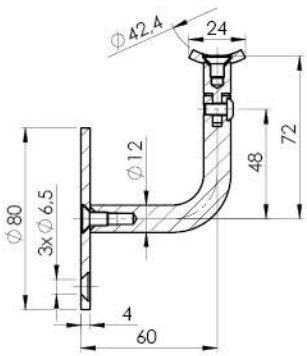

Quality	Finish	art.
AISI304	satin	A/0116-042

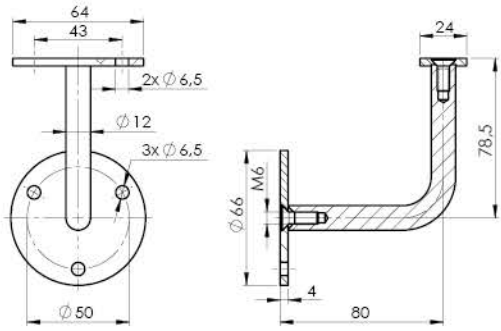

Quality	Finish	art.
AISI304	satin	A/0115-000

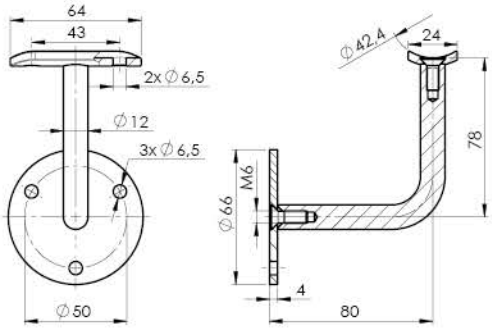

Quality	Finish	art.
AISI304	satin	A/0115-042

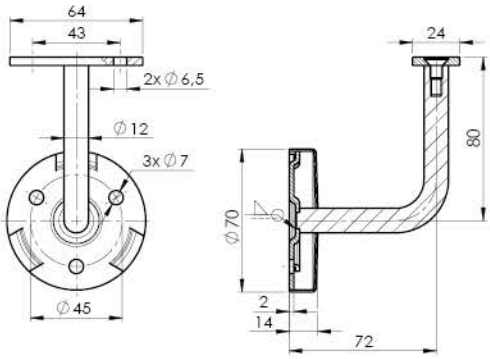

Quality	Finish	art.
AISI304	satin	A/0117-000-B

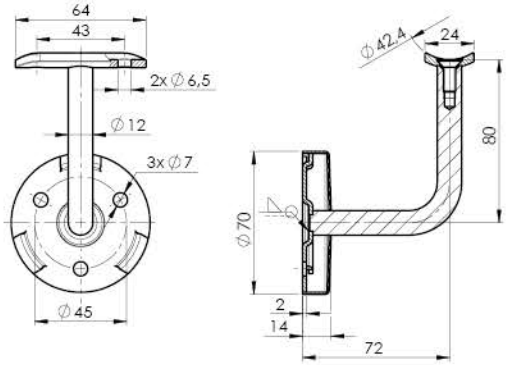

Quality	Finish	art.
AISI304	satin	A/0117-042-B
AISI316		A14/0117-042-B

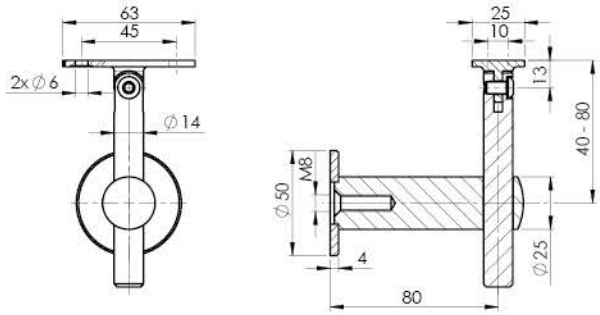

Quality	Finish	art.
AISI304	satin	A/0145-000

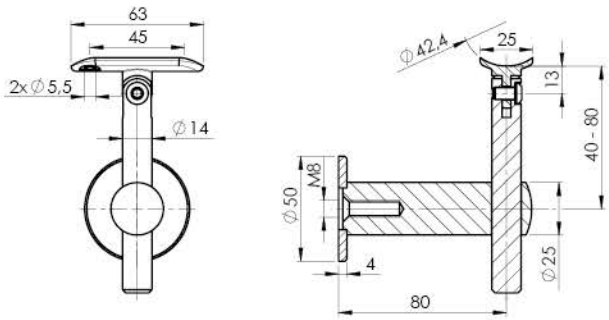

Quality	Finish	art.
AISI304	satin	A/0145-042

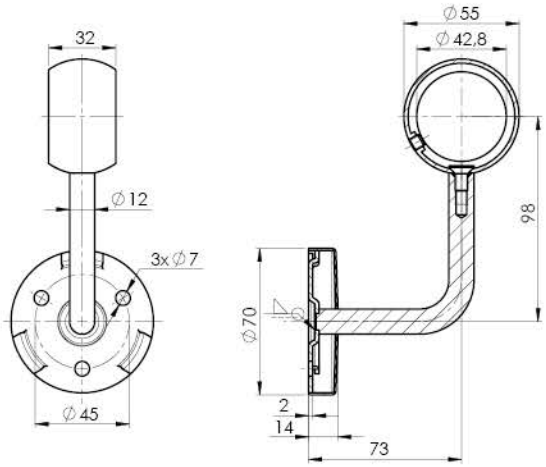

Quality	Finish	art.
AISI304	satin	A/0110-42-55-35

new

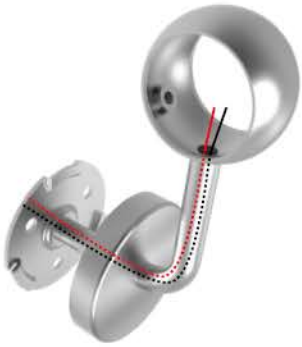

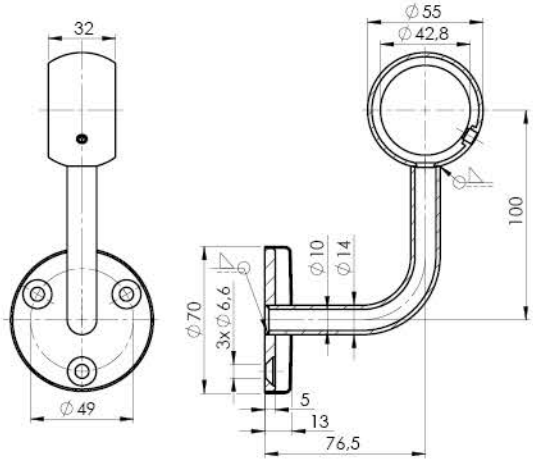

Quality	Finish	art.
AISI304	satin	A/0110-42-55-35-LED

new

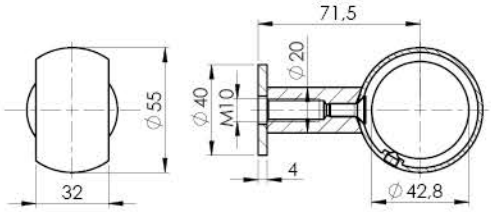

Quality	Finish	art.
AISI304	satin	A/0708-42-55-35

new

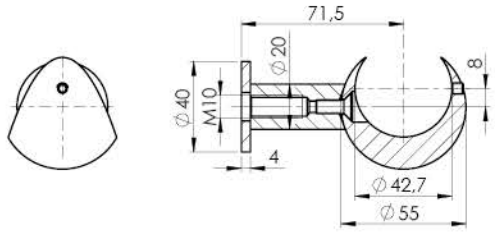

Quality	Finish	art.
AISI304	satin	A/0708-42-55-C

new

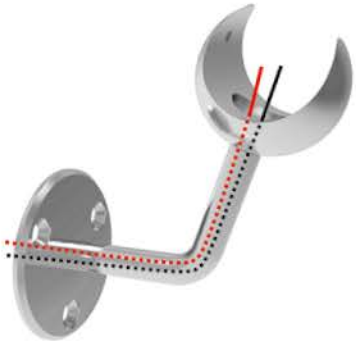

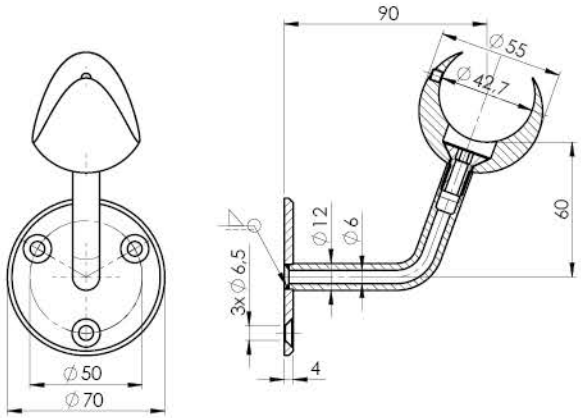

Quality	Finish	art.
AISI316	satin	A14/4114-042-LED

new

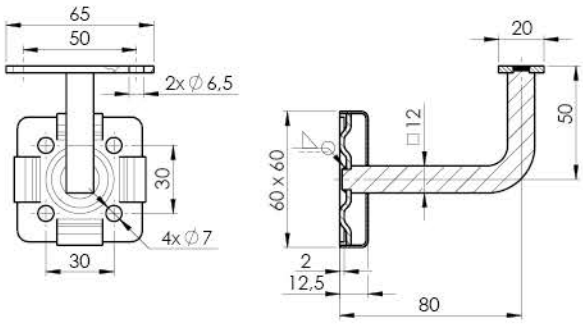

Quality	Finish	art.
AISI304	satin	A/4110-000

new

≥80

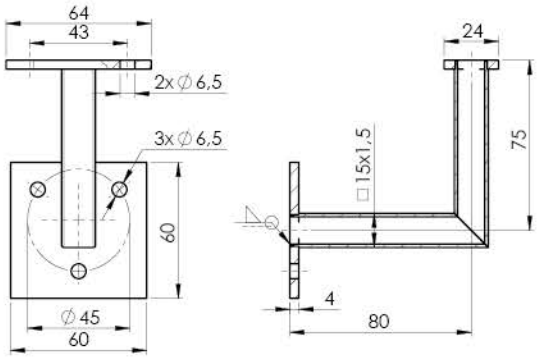

Quality	Finish	art.
AISI304	satin	A/4111-000-LED

new

≥80

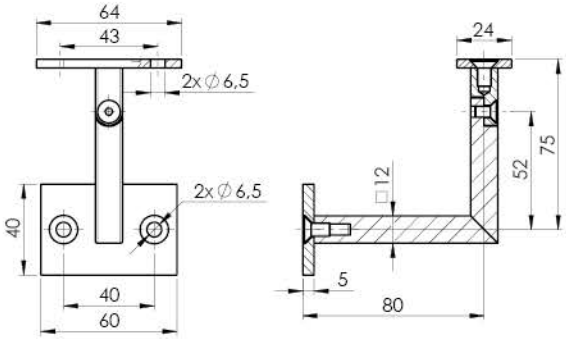

Quality	Finish	art.
AISI304	satin	A/4145-000

new

≥80

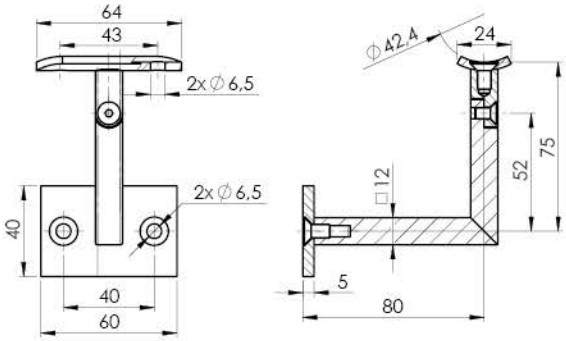

Quality	Finish	art.
AISI304	satin	A/4145-042

new

≥80

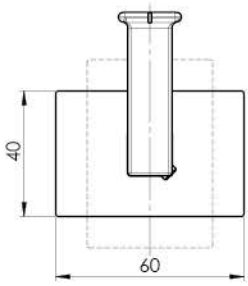

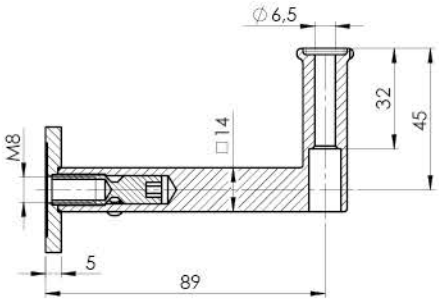

Quality	Finish	art.
AISI304	satin	A/4111-000

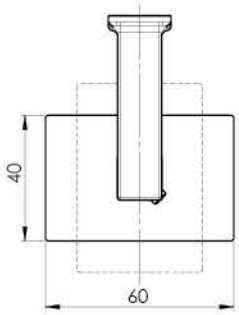

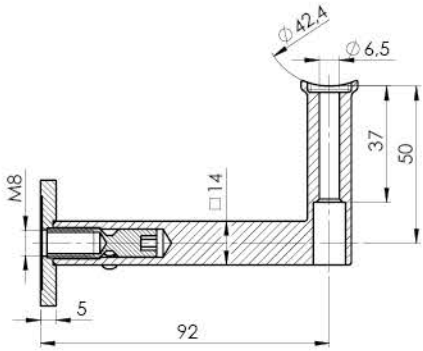

Quality	Finish	art.
AISI304	satin	A/4111-042

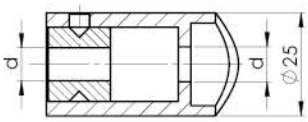

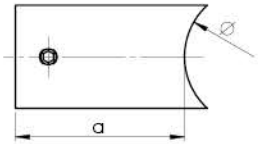

Quality	Finish	∅	art.	a	d
AISI304	satin	33,7	A/0625-033	41	6
		42,4	A/0625-042	43	8,5

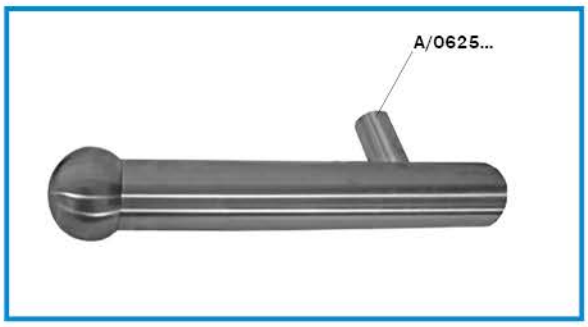

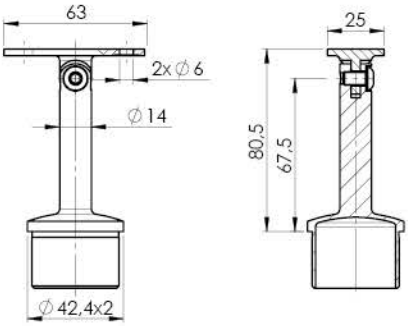

Quality	Finish	art.	D	D1
AISI304	satin	A/0718-200-B	42,4x2,0	14

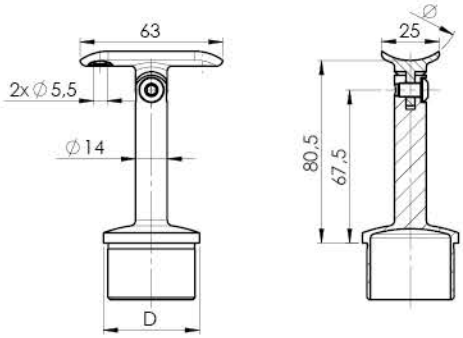

Quality	Finish	∅	art.	D
AISI304	satin	33,7	A/0717-233	33,7x2,0
		42,4	A/0718-242	42,4x2,0
		48,3	A/0718-248	
		48,3	A/0719-248	48,3x2,0
	polish	42,4	A/0718-242-L	42,4x2,0
AISI316	satin	42,4	A14/0718-242	
		48,3	A14/0719-249	48,3x2,6
	polish	42,4	A14/0718-242-L	42,4x2,0

top

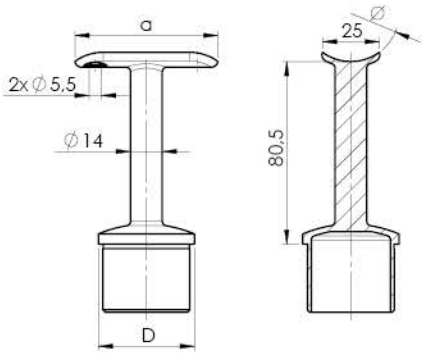

Quality	Finish	∅	art.	D	a
AISI304	satin	42,4	A/0710-242	42,4x2,0	63
	polish		A/0710-242-L		
AISI316	satin		A14/0710-242		
		48,3	A14/0712-249	48,3x2,6	65
	polish	42,4	A14/0710-242-L	42,4x2,0	63

top

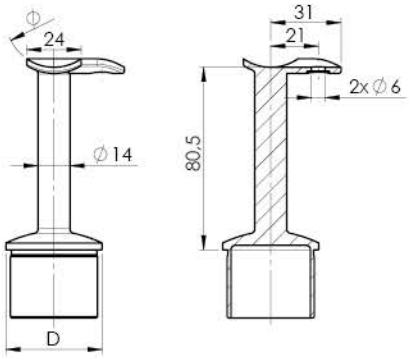

Quality	Finish	∅	art.	D	Flush angle
AISI304	satin	42,4	A/0711-842	42,4x2,0	A/301...
			A/0710-842		A/303...
	polish		A/0710-842-L		A/303...
AISI316	satin		A14/0710-842		A14/303...
		48,3	A14/0712-849	48,3x2,6	
	polish	42,4	A14/0710-842-L	42,4x2,0	A14/303...
			A14/0711-842-L		A14/301... new

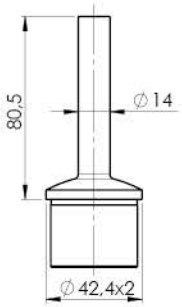

Quality	Finish	art.
AISI304	satin	A/0700-042

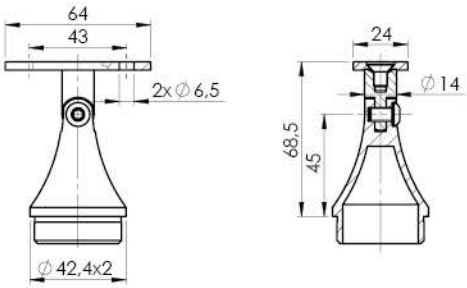

Quality	Finish	art.
AISI304	satin	A/0716-000

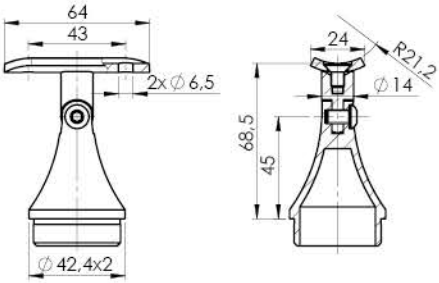

Quality	Finish	art.
AISI304	satin	A/0716-242

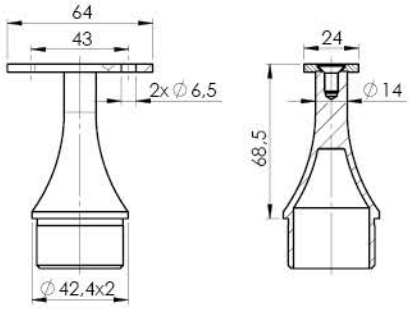

Quality	Finish	art.
AISI304	satin	A/0713-000

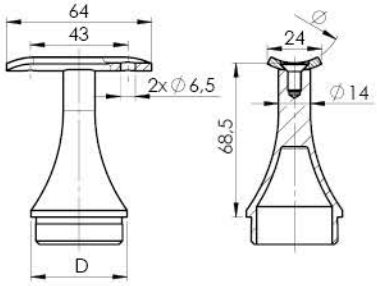

Quality	Finish	∅	art.	D
AISI304	satin	42,4	A/0713-242	42,4x2,0
		48,3	A/0713-248	48,3x2,0

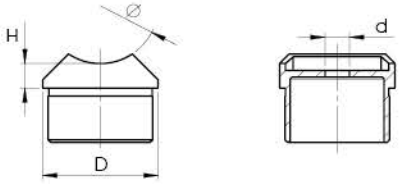

Quality	Finish	∅	art.	H	D	d
AISI304	satin	42,4	A/0727-233	5	33,7x2,0	8,5
			A/0727-242-C	9	42,4x2,0	
	polish	42,4	A/0727-042-L	9		
			A/0727-042-B-L	8		
AISI316	satin	42,4	A14/0727-242-C	9		
		48,3	A14/0729-249		48,3x2,6	

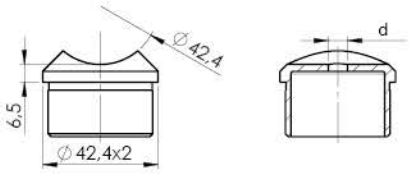

Quality	Finish	art.	d
AISI304	satin	A/0727-242-S	9
	polish	A/0727-042-S-L	7

top

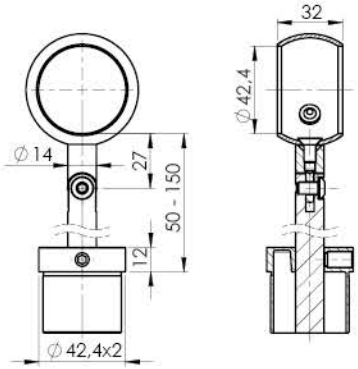

Quality	Finish	art.
AISI304	satin	A/0714-042

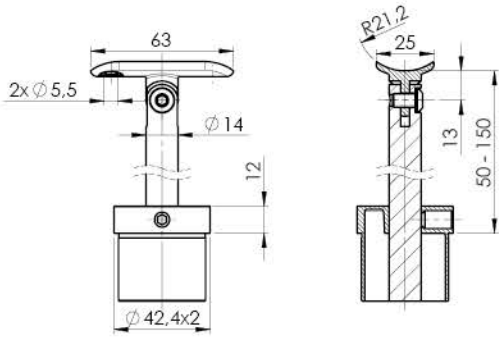

Quality	Finish	art.
AISI304	satin	A/0715-242

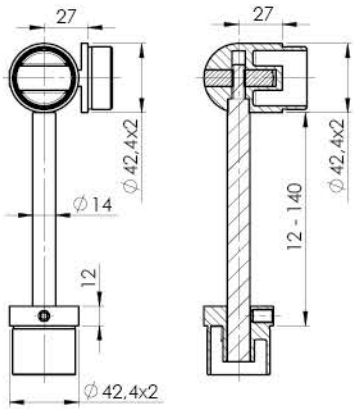

Quality	Finish	art.
AISI304	satin	A/0720-242
		A14/0720-242

new

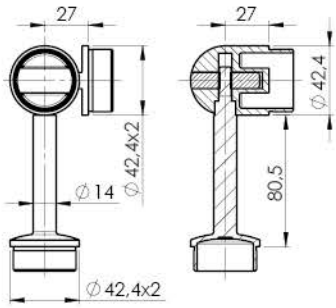

Quality	Finish	art.
AISI316	satin	A14/0721-242-L

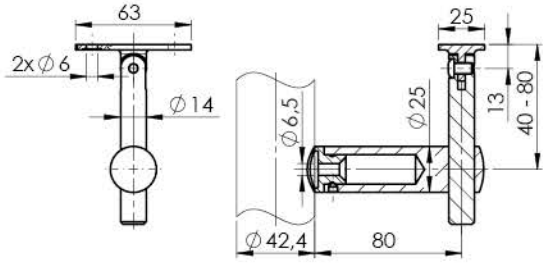

Quality	Finish	art.
AISI304	satin	A/0135-000

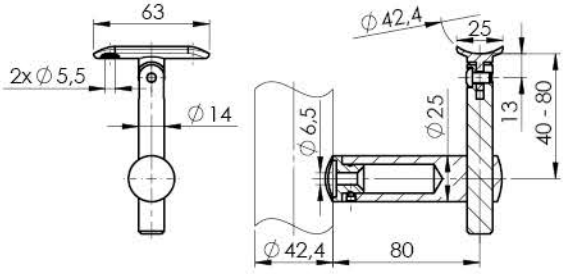

Quality	Finish	art.
AISI304	satin	A/0135-042
	polish	A/0135-042-L
AISI316	satin	A14/0135-042

top

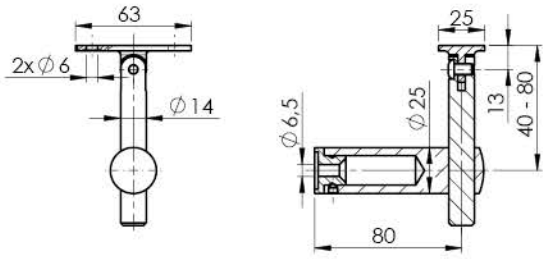

Quality	Finish	art.
AISI304	satin	A/0136-000

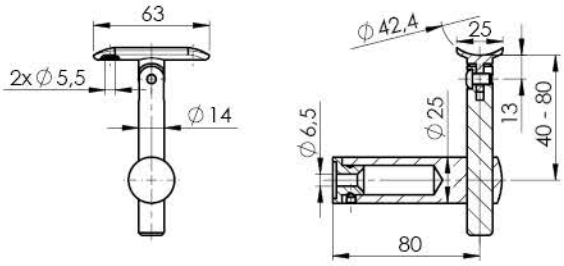

Quality	Finish	art.
AISI304	satin	A/0136-042
	polish	A/0136-042-L

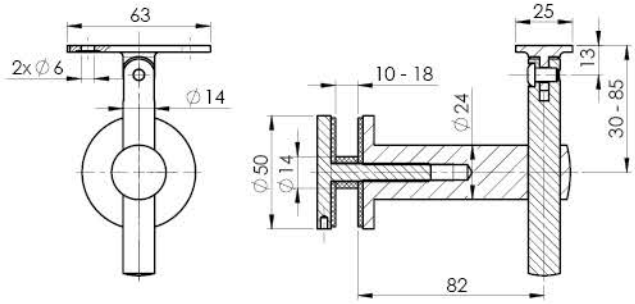

Quality	Finish	art.	Glass hole	
AISI304	satin	A/0155-000	20	new

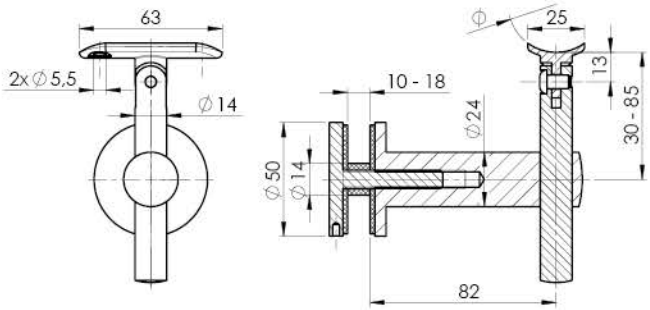

Quality	Finish	∅	art.	Glass hole	
AISI304	satin	42,4	A/0155-042	20	new
AISI316		42,4	A14/0155-042		new
		48,3	A14/0155-048		

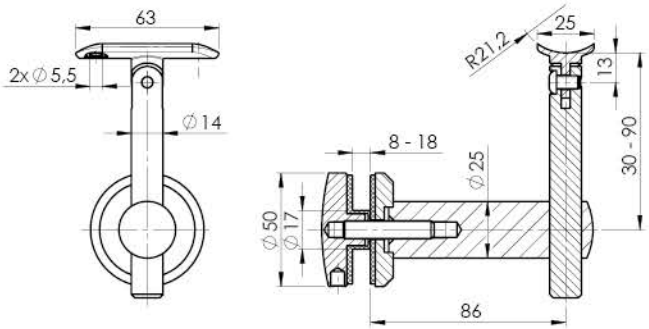

Quality	Finish	art.	Glass hole	
AISI304	satin	A/0155-042-B	20	top

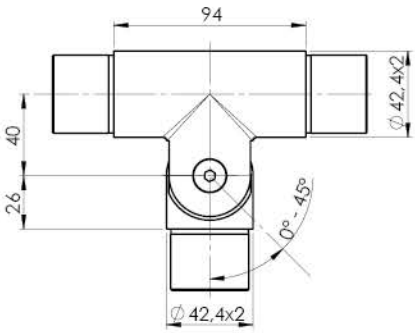

Quality	Finish	art.
AISI304	satin	A/0722-242

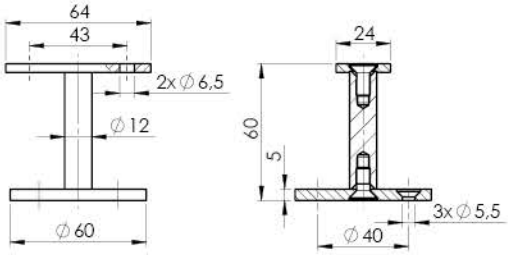

Quality	Finish	art.
AISI304	satin	A/0708-000

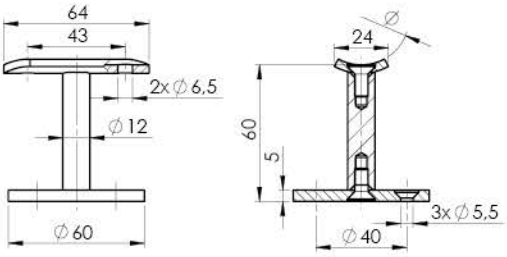

Quality	Finish	∅	art.
AISI304	satin	42,4	A/0708-042-B
		48,3	A/0708-048
AISI316		42,4	A14/0708-042

new

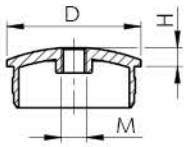

Quality	Finish	D	art.	H	M
AISI304	satin	33,7x2,0	A/5735-233-R	4	8
		42,4x2,0	A/5735-242	6	10
		42,4x2,0	A/5735-242-R	6	8
		48,3x2,0	A/5735-248-R	8	
		48,3x2,0	A/5735-248-R1	6	
AISI316		42,4x2,0	A14/5735-242-R	6	
		48,3x2,6	A14/5735-249	8,5	8

top

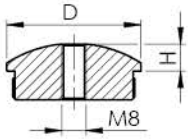

Quality	Finish	D	art.	H
AISI304	satin	33,7x2,0	A/5734-233	5
		42,4x2,0	A/5734-242	9
		42,4x3,0	A/5734-243	7
		48,3x2,0	A/5734-248	8,5

new

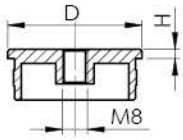

Quality	Finish	D	art.	H
AISI304	satin	33,7x2,0	A/5736-233	2
		42,4x2,0	A/5736-242	3
		48,3x2,0	A/5736-248	
AISI316		42,4x2,0	A14/5736-242	

top

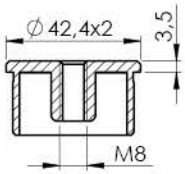

Quality	Finish	art.
AISI304	satin	A/5737-242

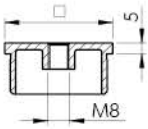

Quality	Finish	⧄	art.
AISI304	satin	30x30x2	A/4735-030-R
		40x40x2	A/4735-040-R
		40x40x3	A/4735-041-R
		50x50x2	A/4735-050-R
		60x60x2	A/4735-060-R
AISI316		40x40x2	A14/4735-040-R

top
new

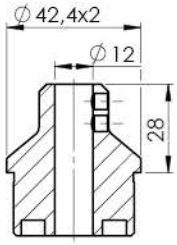

Quality	Finish	art.
AISI304	satin	A/5739-242

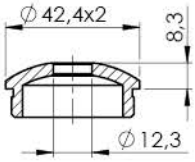

Quality	Finish	art.
AISI304	satin	A/5738-242-12

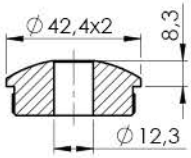

Quality	Finish	art.
AISI304	satin	A/5740-242-12

new

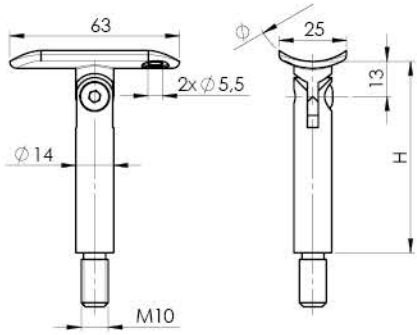

Quality	Finish	∅	art.
AISI304	satin	flat	A/0818-000
		flat	A/0818-000-B
		flat	A/0818-000-C
		42,4	A/0818-042
		48,3	A/0818-048
	polish	flat	A/0818-000-L
		42,4	A/0818-042-L
		42,4	A/0818-042-B-L
AISI316	satin	42,4	A14/0818-042-B

top

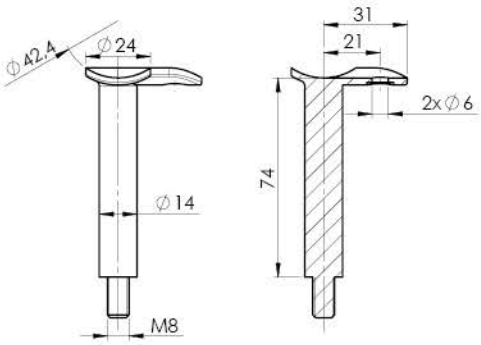

Quality	Finish	art.
AISI304	satin	A/0810-942

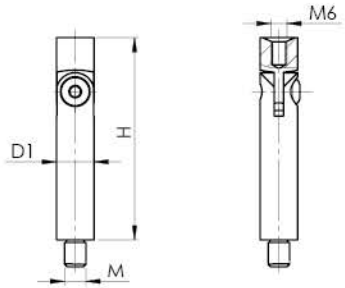

Quality	Finish	art.	D1	H	M
AISI304	satin	A/0812-068	14	68	10
		A/0812-068-S	12		8
		A/0812-068-S1	14	75	
		A/0812-068-M5-S	12	68	
		A/0812-075		75	
		A/0812-100		100	
AISI316		A14/0812-068-S1	14	75	

top

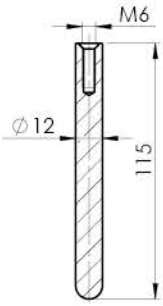

Quality	Finish	art.
AISI304	satin	A/0814-115-M6

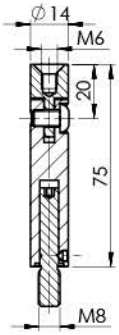

Quality	Finish	art.
AISI304	satin	A/0816-075

new

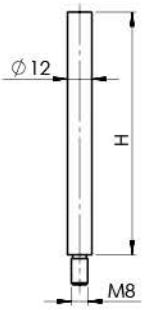

Quality	Finish	art.	H
AISI304	satin	A/0813-075-12Z	75
		A/0813-100-12Z	100
		A/0813-120-12Z	120
AISI316		A14/0813-100-12Z	100

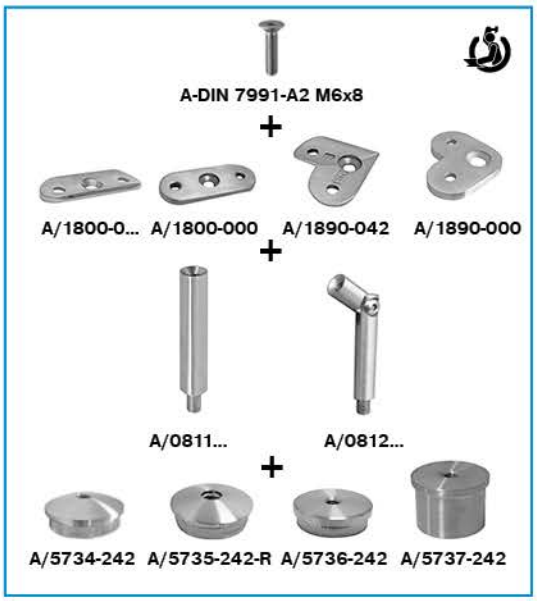

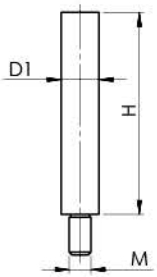

Quality	Finish	art.	D1	H	M
AISI304	satin	A/0811-068	14	68	10
		A/0811-068-S1		75	8
		A/0811-068-S2		68	
		A/0811-068-S3	12	68	
		A/0811-075-12S		75	
		A/0811-120-12S		120	
AISI316		A14/0811-068-S1	14	75	
		A14/0811-068-S2		68	

top

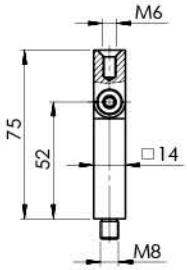

Quality	Finish	art.
AISI304	satin	A/4812-040

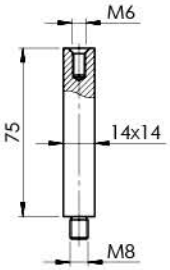

Quality	Finish	art.
AISI304	satin	A/4811-040

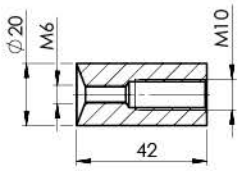

Quality	Finish	art.
AISI304	satin	A/014

new

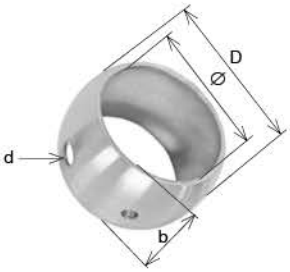

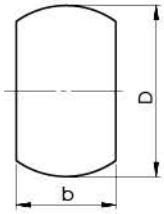

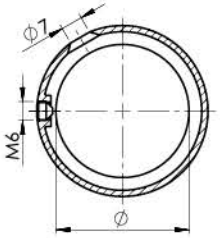

A/0708-42-55-35

Quality	Finish	Ø	art.	D	b
AISI304	satin	33,7	A6/33-55-35-B	44,5	28
		42,4	A6/42-55-35-B	55	32

top

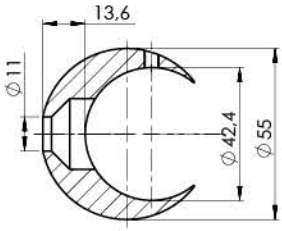

Quality	Finish	art.
AISI316	satin	A14/42-55

new

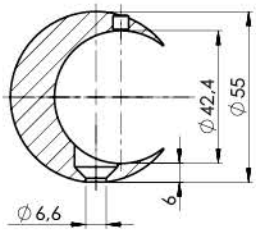

Quality	Finish	art.
AISI316	satin	A14/42-55-C

new

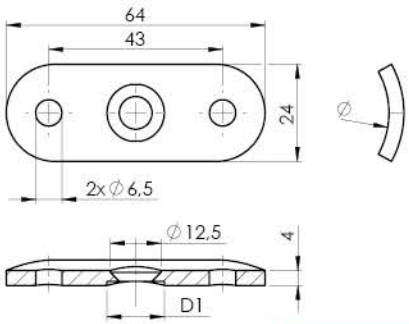

Quality	Finish	∅	art.	D1
AISI304	satin	33,7	A/1800-033	14
		42,4	A/1800-042	
		42,4	A/1800-042-012	12
		48,3	A/1800-048	14
	polish	42,4	A/1800-042-L	
AISI316	satin	42,4	A14/1800-042	
		48,3	A14/1800-048	

top

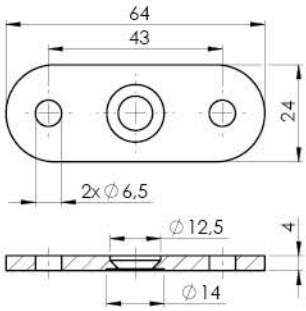

Quality	Finish	art.
AISI304	satin	A/1800-000
AISI316		A14/1800-000

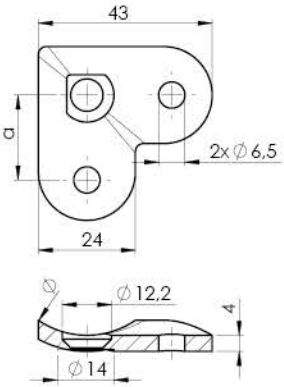

Quality	Finish	∅	art.	a	flush angle
AISI304	satin	42,4	A/1890-042	21	A/301...
		48,3	A/1890-048		
AISI316		42,4	A14/1890-042		
		48,3	A14/1890-048	23	A/303...

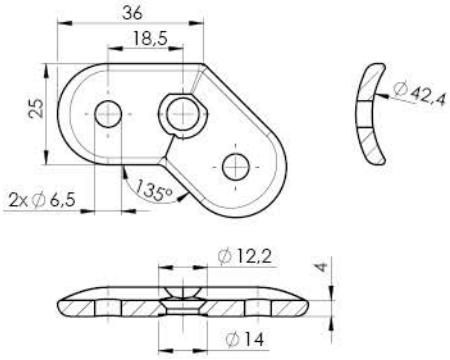

Quality	Finish	art.
AISI316	satin	A14/1870-042

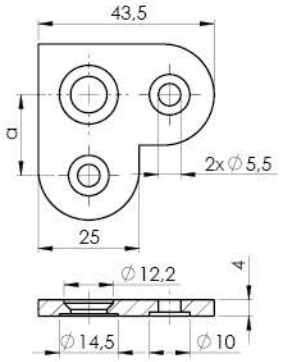

Quality	Finish	art.	a
AISI304	satin	A/1890-000	
		A/1890-000-B	

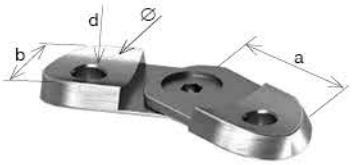

Quality	Finish	∅	art.	a x b	d	t
AISI304	satin	flat	A/1880-000	31,5x24	6,5	6,5
		42,4	A/1880-042			

new

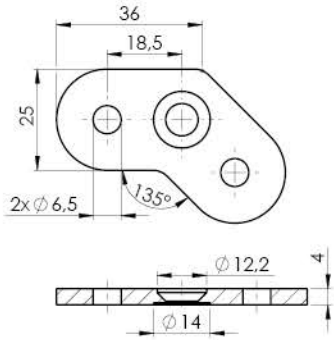

Quality	Finish	art.
AISI316	satin	A14/1870-000

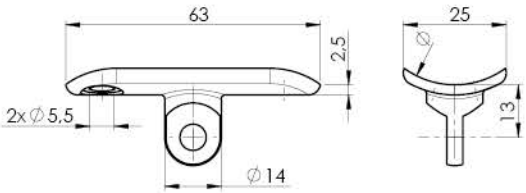

Quality	Finish	∅	art.
AISI304	satin	33,7	A/1800-233
		42,4	A/1800-242
		48,3	A/1800-248
AISI316		42,4	A14/1800-242

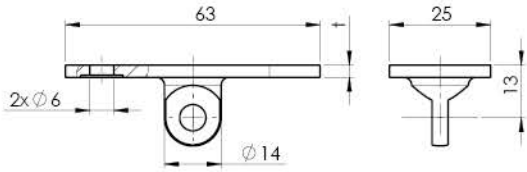

Quality	Finish	art.	t
AISI304	satin	A/1800-200	3
AISI316		A14/1800-200	
		A14/1800-200-B	5

4.5 CROSSBAR HOLDERS

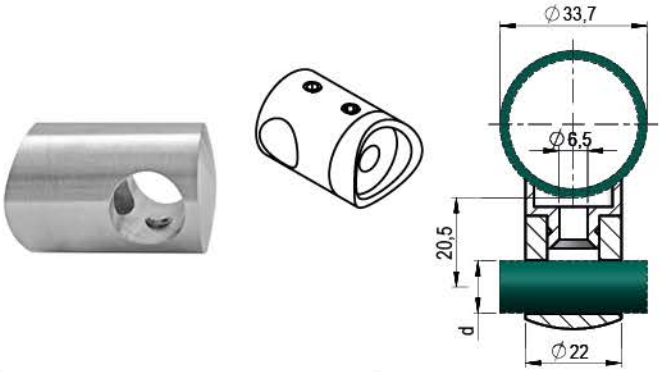

Quality	Finish	art.	d
AISI304	satin	A/0825-033	10
		A/0830-033	12

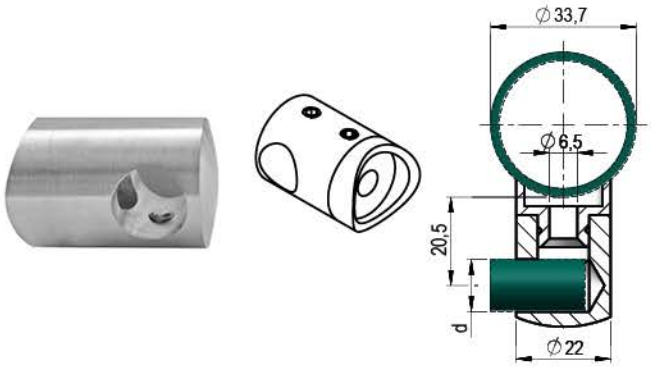

Quality	Finish	art.	d
AISI304	satin	A/0822-033	10
		A/0832-033	12

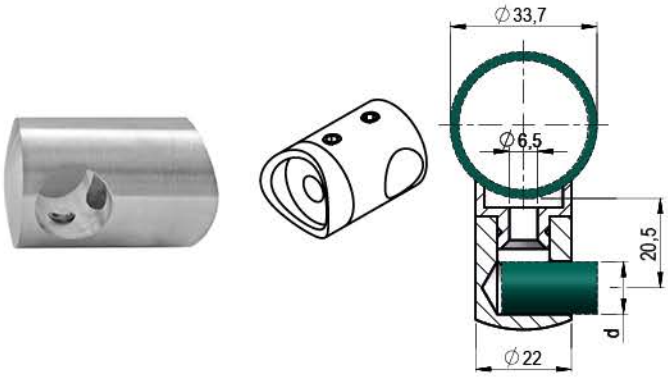

Quality	Finish	art.	d
AISI304	satin	A/0823-033	10
		A/0833-033	12

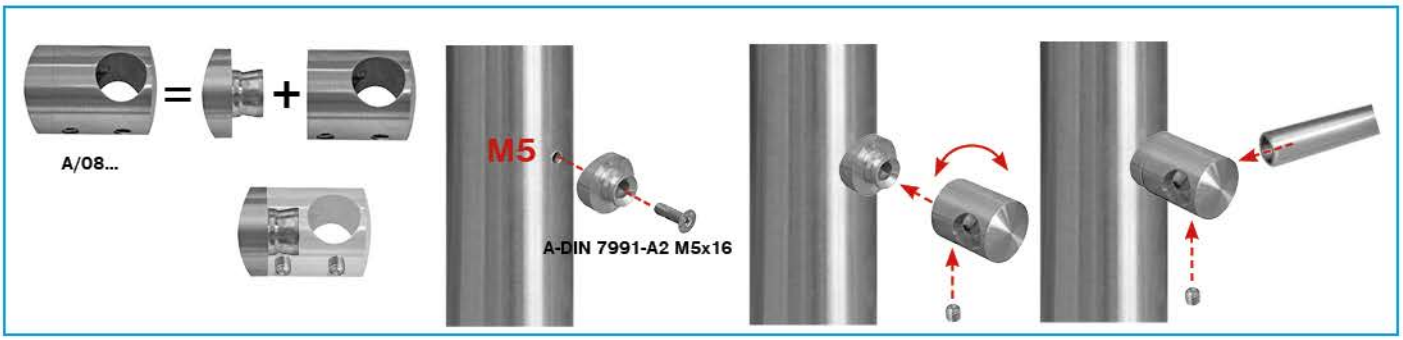

MODEL **D42,4/d**

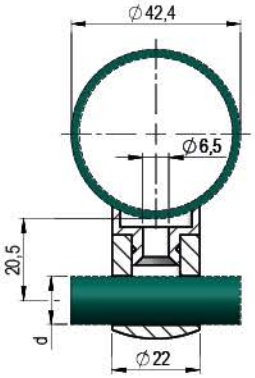

Quality	Finish	art.	d	A-DIN 7991-A2 M6x20
AISI304	satin	A/0825-042	10	
		A/0830-042	12	
		A/0830-042-screw	12	1x
		A/0835-042	14	
	polish	A/0825-042-L	10	
		A/0830-042-L	12	
		A/0835-042-L	14	
AISI316	satin	A14/0830-042	12	
	polish	A14/0830-042-L		

top
new

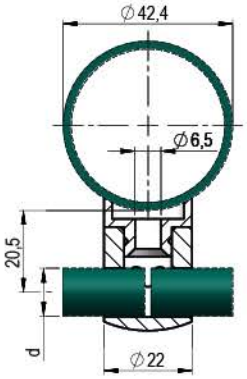

Quality	Finish	art.	d
AISI304	satin	A/0826-042	10
		A/0831-042	12
	polish	A/0831-042-L	12
AISI316	satin	A14/0831-042	12

top

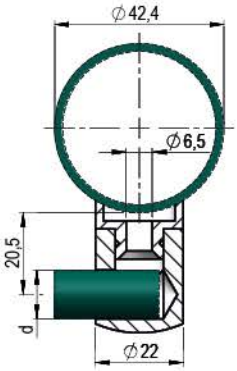

Quality	Finish	art.	d
AISI304	satin	A/0822-042	10
		A/0832-042	12
	polish	A/0832-042-L	12
AISI316	satin	A14/0832-042	12

top

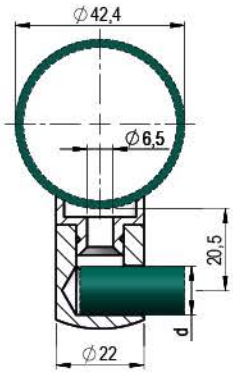

Quality	Finish	art.	d
AISI304	satin	A/0823-042	10
		A/0833-042	12
	polish	A/0833-042-L	12
AISI316	satin	A14/0833-042	12

top

MODEL **D42,4/d**

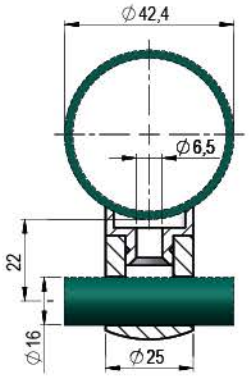

Quality	Finish	art.	d
AISI304	satin	A/0840-042	16
		A/0840-042-B	
	polish	A/0840-042-L	
AISI316	polish	A14/0840-042-L	
		A14/0840-042-L-B	

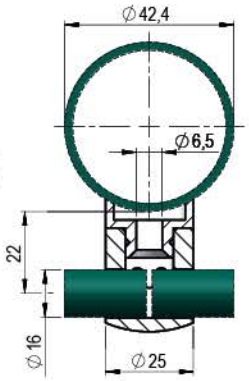

Quality	Finish	art.	d
AISI304	satin	A/0841-042	16

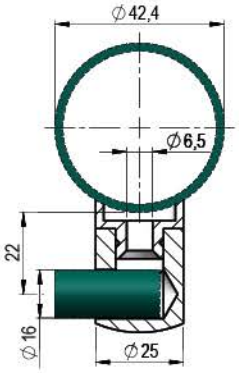

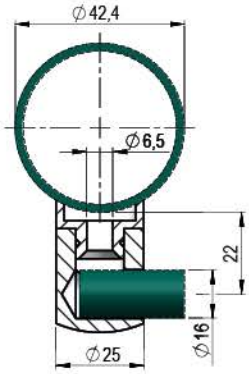

Quality	Finish	art.	d
AISI304	satin	A/0842-042	16

Quality	Finish	art.	d
AISI304	satin	A/0841-042	16

MODEL **D48,3/d**

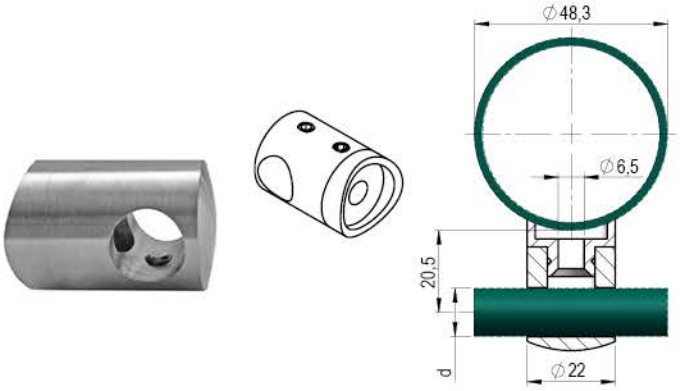

Quality	Finish	art.	d
AISI304	satin	A/0830-048	10
		A/0840-048	12

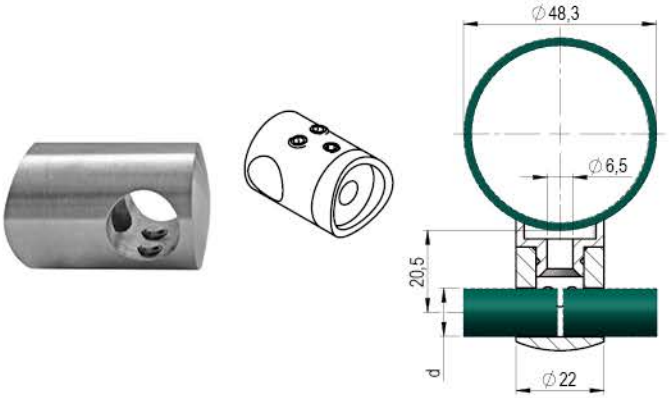

Quality	Finish	art.	d
AISI304	satin	A/0826-048	10

new

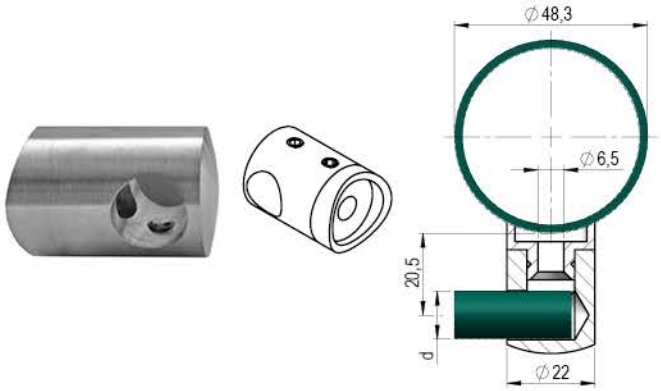

Quality	Finish	art.	d
AISI304	satin	A/0832-048	10

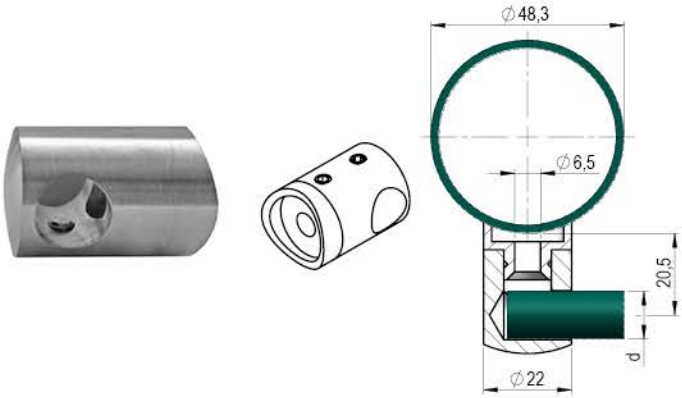

Quality	Finish	art.	d
AISI304	satin	A/0833-048	10

MODEL **D48,3/d**

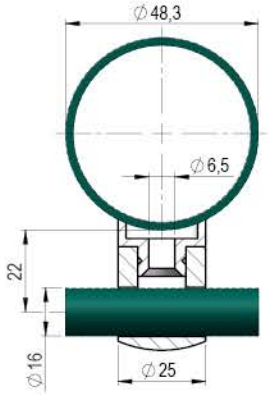

Quality	Finish	art.	d
AISI304	satin	A/0840-048	16

MODEL **00/d**

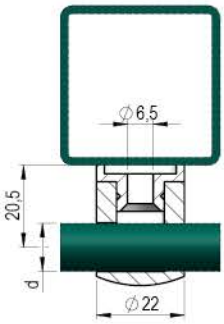

Quality	Finish	art.	d
AISI304	satin	A/0825-000	10
		A/0830-000	12
		A/0835-000	14
	polish	A/0830-000-L	12
AISI316	satin	A14/0830-000	12

top

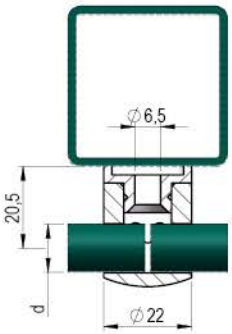

Quality	Finish	art.	d
AISI304	satin	A/0826-000	10
		A/0831-000	12
AISI316	satin	A14/0831-000	12

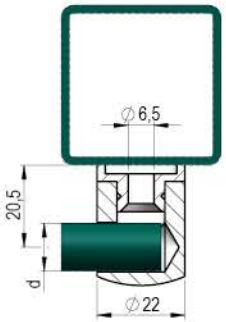

Quality	Finish	art.	d
AISI304	satin	A/0822-000	10
		A/0832-000	12
	polish	A/0832-000-L	12
AISI316	satin	A14/0832-000	12

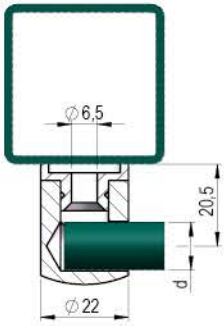

Quality	Finish	art.	d
AISI304	satin	A/0823-000	10
		A/0833-000	12
	polish	A/0833-000-L	12
AISI316	satin	A14/0833-000	12

MODEL 00/d

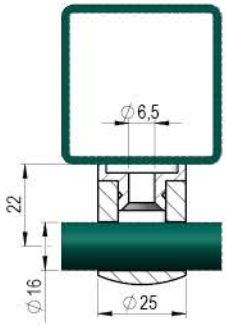

Quality	Finish	art.	d
AISI304	satin	A/0840-000	16
		A/0840-000-B	
	polish	A/0840-000-L	

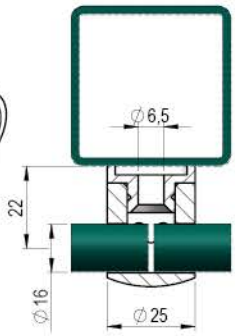

Quality	Finish	art.	d
AISI304	satin	A/0841-000	16

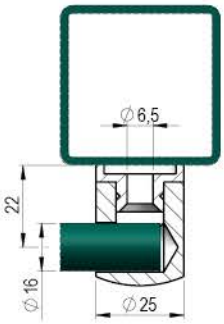

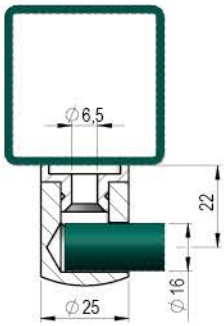

Quality	Finish	art.	d
AISI304	satin	A/0842-000	16

Quality	Finish	art.	d
AISI304	satin	A/0843-000	16

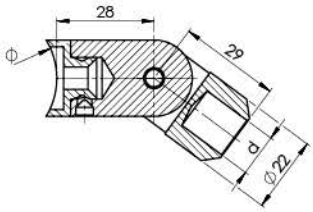

Quality	Finish	∅	art.	d
AISI304	satin	42,4	A/0855-042	12
		flat	A/0855-000	
		42,4	A/0856-042	14
		flat	A/0856-000	

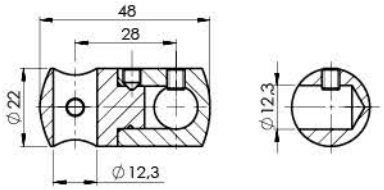

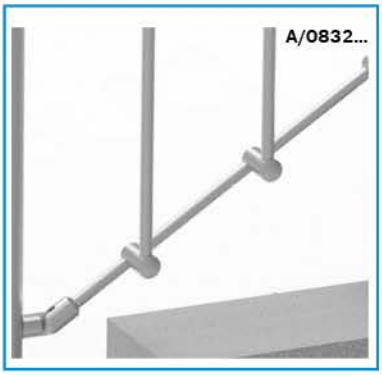

Quality	Finish	art.
AISI304	satin	A/0832-012-0

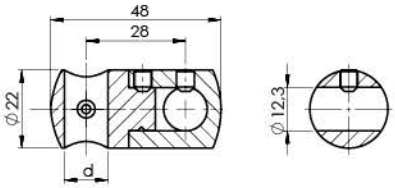

Quality	Finish	art.	d
AISI304	satin	A/0830-012	12
		A/0830-014	14
		A/0830-016	16

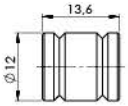

Quality	Finish	art.
AISI304	satin	A/083-PIN

new

d10	A/0825-000	A/0823-000	A/0822-000	A/083-PIN	A/0825-000 A/0830-000 A/0835-000
d12	A/0830-000	A/0833-000	A/0832-000		
d14	A/0835-000				
d16	A/0840-000	A/0843-000	A/0842-000	A/083-PIN	A/0840-000

AISI 304 satin example. Combinations also availiable for AISI 304 polish and AISI 316 satin.

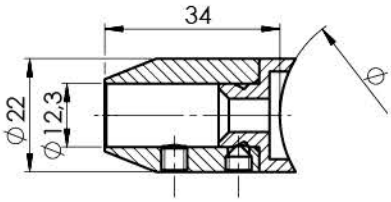

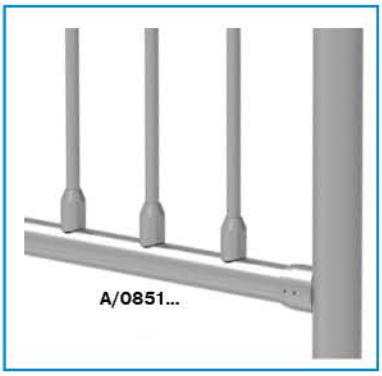

Quality	Finish	∅	art.
AISI304	satin	flat	A/0851-000
		33,7	A/0851-033
		42,4	A/0851-042

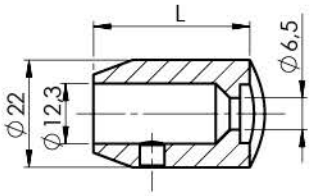

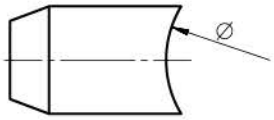

Quality	Finish	∅	art.	L
AISI304	satin	42,4	A/0850-042	32
		42,4	A/0850-042-B	35
		flat	A/0850-000	32

top

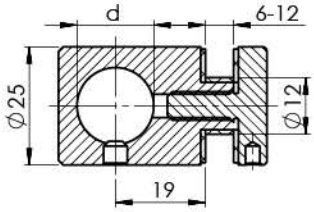

Quality	Finish	art.	d
AISI304	satin	A/0746-012	12
		A/0746-016	16

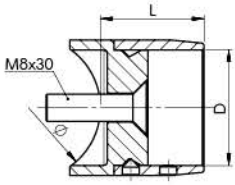

Quality	Finish	∅	art.	D	L
AISI304	satin	33,7	A/0502-033	33,7	30
		42,4	A/0502-042		34
		42,4	A/0522-042	42,4	

new

4.6 CONNECTORS

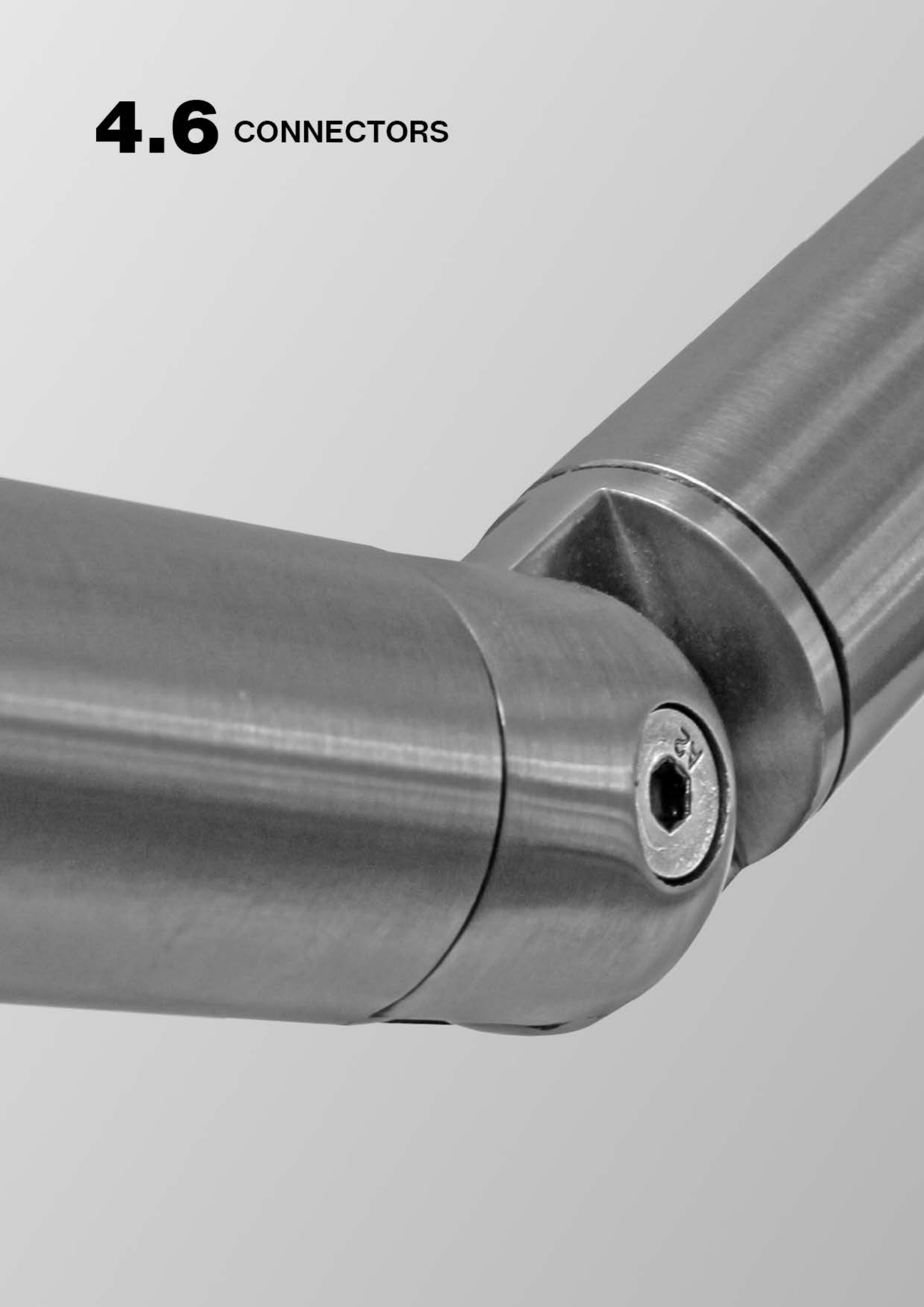

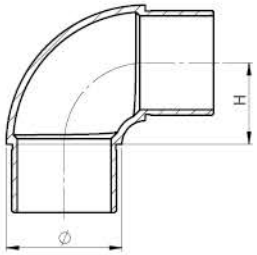

Quality	Finish	∅	art.	H	
AISI304	satin	33,7x2,0	A/0305-233	36	
		42,4x2,0	A/0305-242	30	top
		48,3x 2,0	A/0305-248	35	
	polish	42,4x2,0	A/0305-242-L	30	
		48,3x 2,0	A/0305-248-L	35	
AISI316	satin	42,4x2,0	A14/0305-242	45	new
		42,4x2,0	A14/0305-242-B	30	
	polish	42,4x2,0	A14/0305-242-L	30	
		48,3x 2,0	A14/0305-248-L	35	

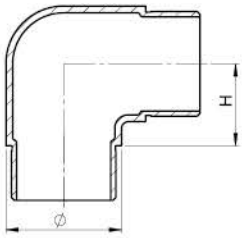

Quality	Finish	∅	art.	H
AISI304	satin	33,7x2,0	A/0303-233	25
		42,4x2,0	A/0303-242	30
		42,4x2,0	A/0303-242-B	31
		48,3x2,0	A/0303-248	30
	polish	42,4x2,0	A/0303-242-L	
AISI316	satin	42,4x2,0	A14/0303-242	
		48,3x2,6	A14/0303-249	35
	polish	42,4x2,0	A14/0303-242-L	30

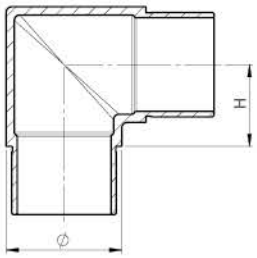

Quality	Finish	∅	art.	H	
AISI304	satin	33,7x2,0	A/0301-233	25	
		33,7x2,0	A/0301-233-S	20	
		42,4x2,0	A/0301-242	30	top
		42,4x2,0	A/0301-242-B	31	
		48,3x2,0	A/0301-248	35	
	polish	42,4x2,0	A/0301-242-L	30	
AISI316	satin	42,4x2,0	A14/0301-242		
		42,4x2,0	A14/0301-242-S	44	
		48,3x2,6	A14/0301-249	35	

+

A/1890-...

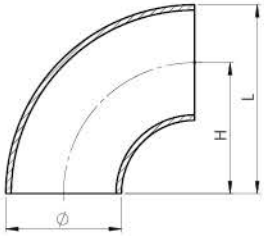

Quality	Finish	∅	art.	H	L	
AISI304	satin	33,7x2,0	A/1305-233	38	55	
		42,4x2,0	A/1305-242	48	69	
		48,3x2,0	A/1305-248	57	81	
	polish	42,4x2,0	A/1305-242-L	48	69	
	raw	33,7x2,0	A/1305-233-N	38	55	
		42,4x2,0	A/1305-242-N	48	69	new
		48,3x2,0	A/1305-248-N	57	81	
AISI316	satin	42,4x2,0	A14/1305-242	48	69	

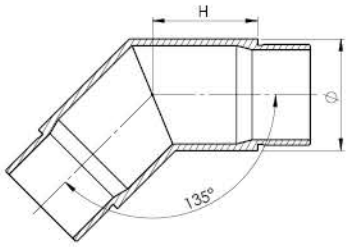

Quality	Finish	∅	art.	H	
AISI304	satin	33,7x2,0	A/0300-233	25	
		42,4x2,0	A/0300-242	40	new
		42,4x2,0	A/0300-242-B	30	
		48,3x2,0	A/0300-248	35	new
AISI316		42,4x2,0	A14/0300-242-B	30	
		48,3x2,0	A14/0300-248	35	new
		48,3x2,6	A14/0300-249	30	

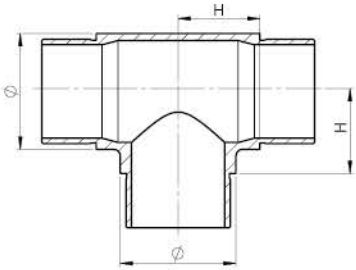

Quality	Finish	∅	art.	H	
AISI304	satin	33,7x2,0	A/0307-233	25	
		42,4x2,0	A/0307-242-S	30	
		48,3x20	A/0307-248	35	
	polish	42,4x2,0	A/0307-242-L	30	
AISI316	satin	42,4x2,0	A14/0307-242-S		
		48,3x2,0	A14/0307-248	35	new
		48,3x2,6	A14/0307-249		

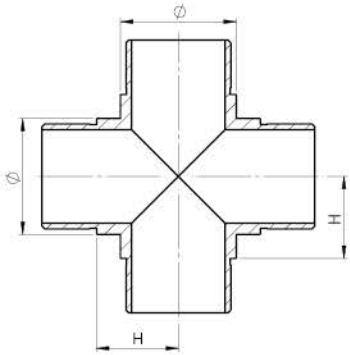

Quality	Finish	∅	art.	H
AISI304	satin	33,7x2,0	A/0308-233	24
		42,4x2,0	A/0308-242	30

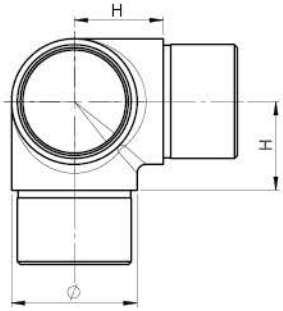

Quality	Finish	∅	art.	H	
AISI304	satin	33,7x2,0	A/0304-233	25	
		42,4x2,0	A/0304-242	31	
		48,3x2,0	A/0304-248	35	new
	polish	42,4x2,0	A/0304-242-L	29	
AISI316	satin	42,4x2,0	A14/0304-242	31	
		48,3x2,0	A14/0304-248	35	new
		48,3x2,6	A14/0304-249		

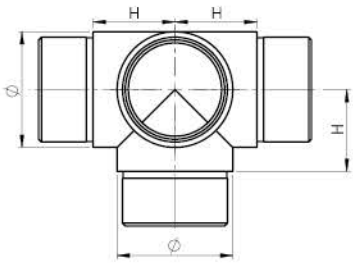

Quality	Finish	∅	art.	H
AISI304	satin	33,7x2,0	A/0309-233	24
		42,4x2,0	A/0309-242	30

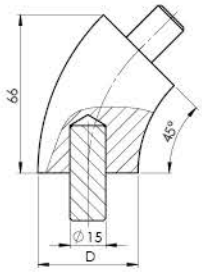

Quality	Finish	D	art.
Beech	natural	42	WB/D42-45°
		50	WB/D50-45°
Oak		42	WD/D42-45°

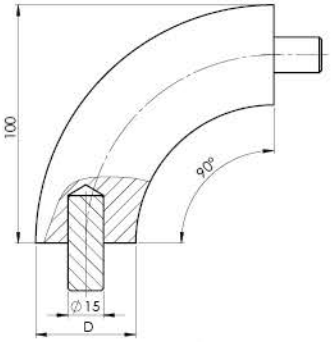

Quality	Finish	D	art.
Beech	natural	42	WB/D42-90°
		45	WB/D45-90°
		50	WB/D50-90°
Oak		42	WD/D42-90°
		50	WD/D50-90°

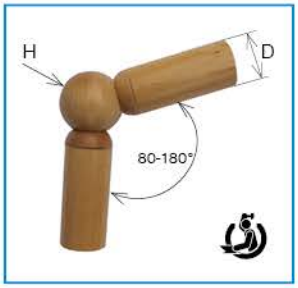

Quality	Finish	D	art.	H
Beech	natural	42	WB/D42-D55-klb	55
Oak			WD/D42-D55-klb	

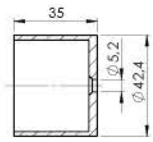

Quality	Finish	art.
AISI304	satin	A20/0790-042-R

wood

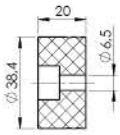

Quality	art.
PVC	A20/0729-042-S

wood

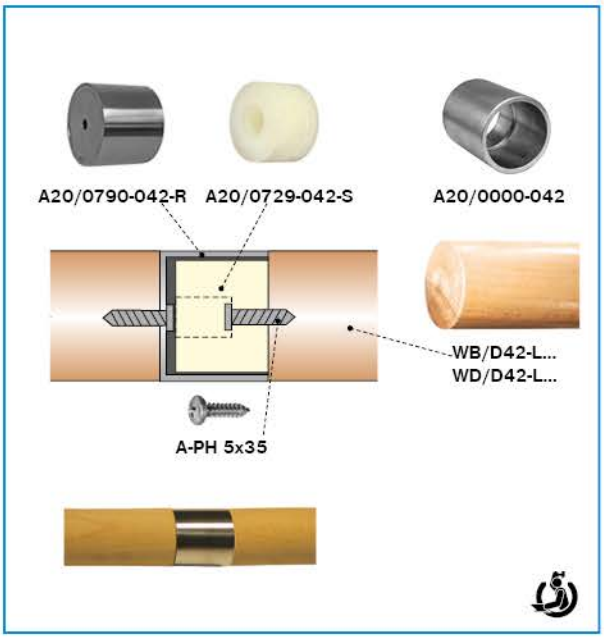

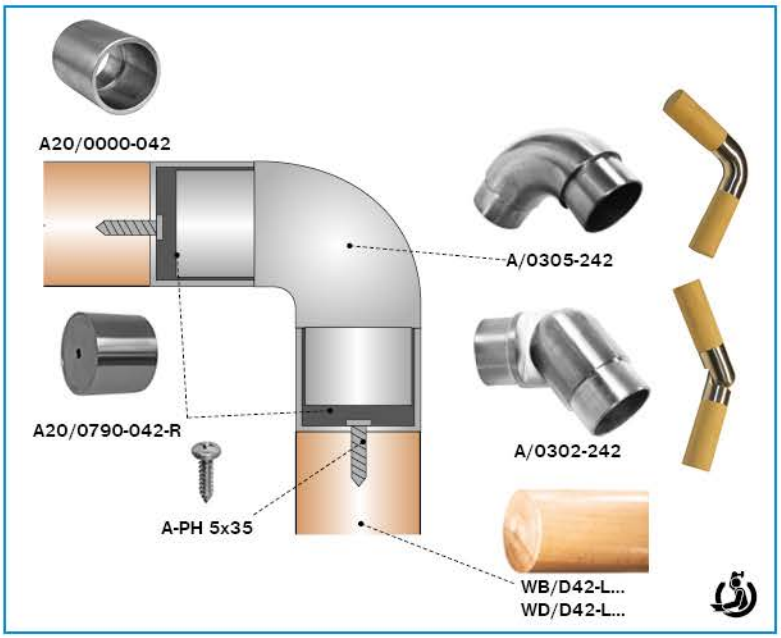

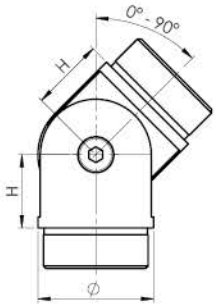

Quality	Finish	∅	art.	H
AISI304	satin	33,7x2,0	A/0302-233	22
		42,4x2,0	A/0302-242	27
		48,3x2,0	A/0302-248	29
	polish	42,4x2,0	A/0302-242-L	27
		42,4x2,0	A/0302-242-B-L	
AISI316	satin	42,4x2,0	A14/0302-242	
		48,3x2,6	A14/0302-249	30
	polish	42,4x2,0	A14/0302-242-L	27

top new

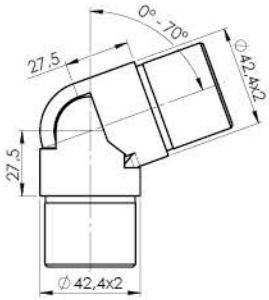

Quality	Finish	art.
AISI304	satin	A/0312-242-B
	polish	A/0312-242-L
AISI316	satin	A14/0312-242

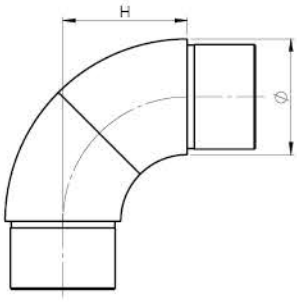

Quality	Finish	∅	art.	H
AISI304	satin	33,7x2,0	A/0302-033	38
		42,4x2,0	A/0302-042	44

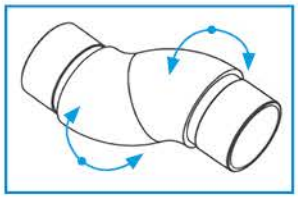

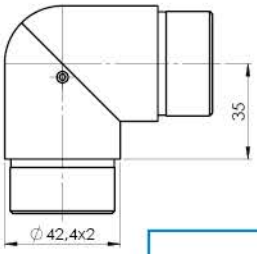

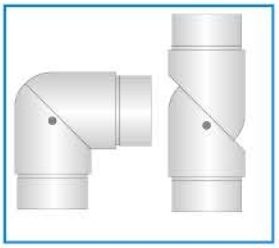

Quality	Finish	art.
AISI304	satin	A/0313-242

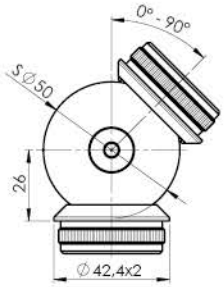

Quality	Finish	art.
AISI304	satin	A7/42-55-A

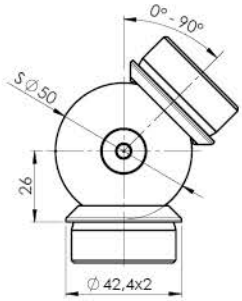

Quality	Finish	art.
AISI304	satin	A7/42-55-B

new

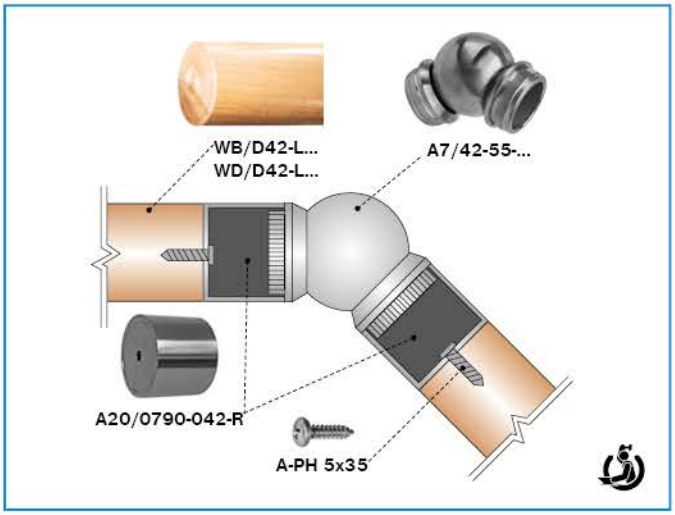

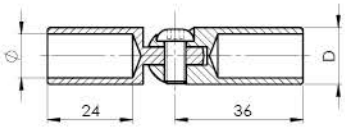

Quality	Finish	∅	art.	D
AISI304	satin	10	A/0302-010	14
		12	A/0302-012	z16
		14	A/0302-014	
	polish	12	A/0302-012-L	
AISI316	satin	12	A14/0302-012	
	polish	12	A14/0302-012-L	

new

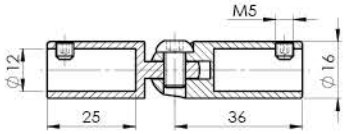

Quality	Finish	art.
AISI304	satin	A/0302-012-B

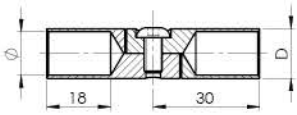

Quality	Finish	∅	art.	D
AISI304	satin	10	A/0302-010-S	12
		12	A/0302-012-S	14
AISI316		12	A14/0302-012-S	

top

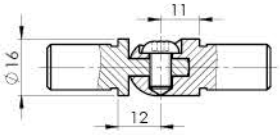

Quality	Finish	art.
AISI304	satin	A/0302-016

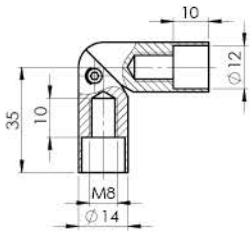

Quality	Finish	art.
AISI304	satin	A/0313-012

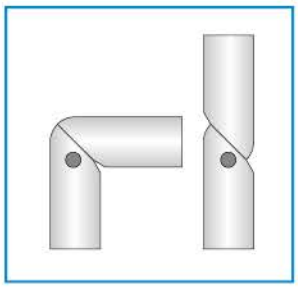

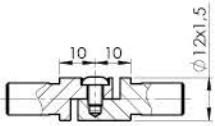

Quality	Finish	∅	art.
AISI304	satin	12	A/0302-012-C

new

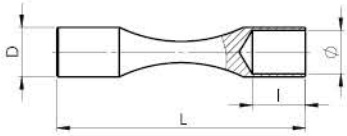

Quality	Finish	∅	art.	L	D
AISI304	satin	10	A/0012-010	80	12
		12	A/0012-012	102	14
		12	A/0012-012-B	70	

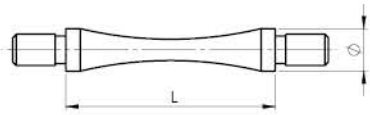

Quality	Finish	∅	art.
AISI304	satin	12x1,5	A/0013-012
		14x1,5	A/0013-014

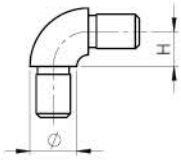

Quality	Finish	∅	art.	H
AISI304	satin	12x1,5	A/0305-012	9
		16x1,5	A/0305-016	11

top

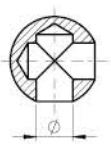

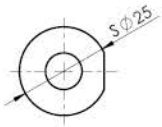

Quality	Finish	∅	art.	D
AISI304	satin	10	A/0220-210	25
		12	A/0220-225	

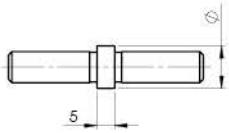

Quality	Finish	∅	art.
AISI304	satin	12x1	A/0041-011
		12x1,5	A/0041-012-B
AISI316			A14/0041-012

new

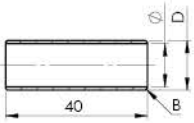

Quality	Finish	∅	art.	D	B
AISI304	satin	8	A/0040-008	12	3x30°
		10	A/0040-010	12	1x45°
		12	A/0040-012	14	1x45°
		12	A/0040-012-B	14	3x30°
		14	A/0040-014	16	1x45°
		16	A/0040-016	18	1x45°

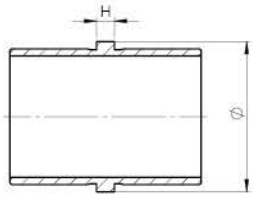

Quality	Finish	∅	art.	H
AISI304	satin	33,7x2,0	A/0790-233	5
		42,4x1,5	A/0790-241	4
		42,4x2,0	A/0790-242	
		48,3x2,0	A/0790-248	6
	polish	42,4x2,0	A/0790-242-L	5
AISI316	satin	42,4x2,6	A14/0790-242	4
		48,3x2,0	A14/0790-249	5
	polish	42,4x2,0	A14/0790-242-L	4

new
top

Quality	Finish	∅	art.
AISI304	satin	33,7x2	A/0791-033
		42,4x2	A/0791-042

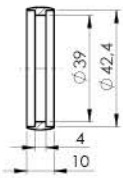

Quality	Finish	art.
AISI304	satin	A7/42-11-A

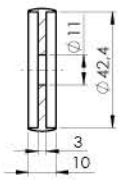

Quality	Finish	art.
AISI304	satin	A7/42-11

4.7 END CAPS

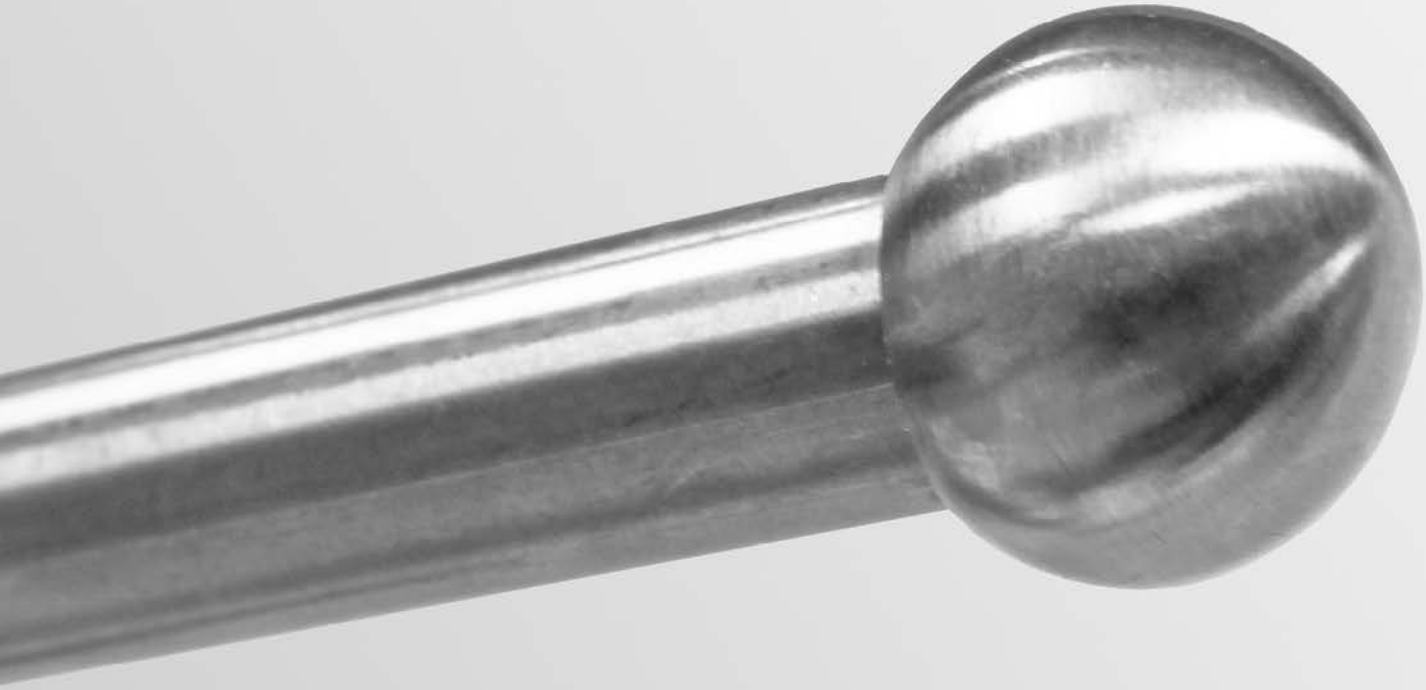

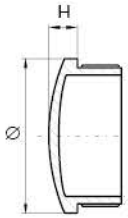

Quality	Finish	∅	art.	H
AISI304	satin	33,7x2,0	A/5729-233	6
		33,7x2,0	A/5729-233-B	5
		42,4x2,0	A/5729-242	6
		42,4x2,0	A/5729-242-B	8
		48,3x2,0	A/5729-248	8
	polish	42,4x2,0	A/5729-242-L	6
AISI316	satin	42,4x2,0	A14/5729-242	
		48,3x2,6	A14/5729-249	
	polish	42,4x2,0	A14/5729-242-L	

top

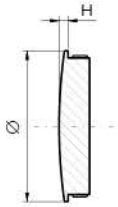

Quality	Finish	∅	art.	H
AISI304	satin	33,7x2,0	A/5728-233	6
		42,4x2,0	A/5728-242	6
		42,4x2,0	A/5728-242-A	9
		42,4x2,0	A/5728-242-B	4
		42,4x2,0	A/5728-242-C	2
		42,4x3,0	A/5728-243	6

new

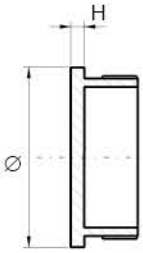

Quality	Finish	∅	art.	H
AISI304	satin	33,7x2,0	A/5732-233	3
		42,4x2,0	A/5732-242	
		48,3x2,0	A/5732-248	2
		48,3x2,0	A/5732-248-B	4,5
	polish	42,4x2,0	A/5732-242-L	3
AISI316	satin	42,4x2,0	A14/5732-242	
	polish	42,4x2,0	A14/5732-242-L	

top

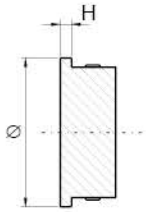

Quality	Finish	∅	art.	H
AISI304	satin	33,7x2,0	A/5731-233	3
		42,4x2,0	A/5731-242	3
		42,4x2,0	A/5731-242-A	5
AISI316		42,4x2,0	A14/5731-242	3

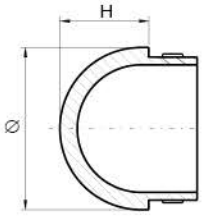

Quality	Finish	∅	art.	H
AISI304	satin	33,7x2,0	A/5730-233	17
		42,4x2,0	A/5730-242	23
		48,3x2,0	A/5730-248	23
		48,3x2,6	A/5730-249	23
	polish	42,4x2,0	A/5730-242-L	21
AISI316	satin	42,4x2,0	A14/5730-242	21

new

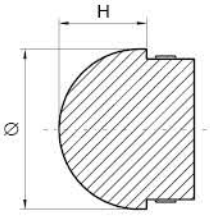

Quality	Finish	∅	art.	H
AISI304	satin	42,4x2,0	A/5733-242	21

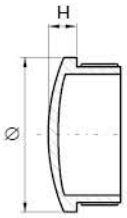

Quality	Finish	∅	art.	H
AISI316	satin	12x1,0-1,5	A14/0014-012	3
		16x1,0-2,0	A14/0014-016	3,5
		42,4x2,0-2,6	A14/0014-042	7,5

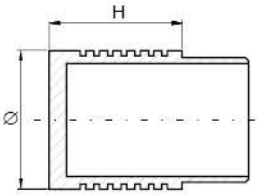

Quality	Finish	∅	art.	H
AISI304	satin	42,4x2,0	A/0736-242	40
			A14/0736-242	

new
new

END CAPS

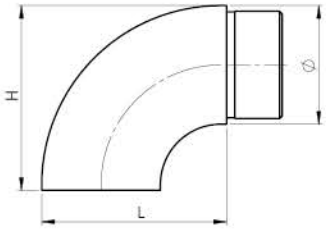

Quality	Finish	∅	art.	L	H
AISI304	satin	33,7x2,0	A/0739-233	55	57
		42,4 x2,0	A/0739-242-S	66	66
	polish	42,4 x2,0	A/0739-242-L		
AISI316	satin	33,7x2,0	A14/0739-233	55	57
		42,4 x2,0	A14/0739-242	66	66
		48,3 x2,6	A14/0739-249	75	77

top

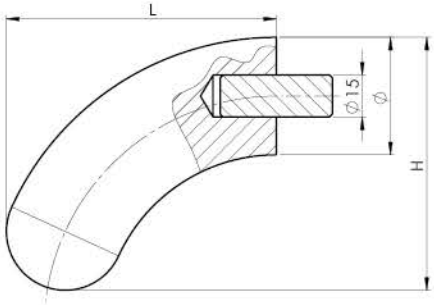

Quality	Finish	∅	art.	L	H
Beech	natural	42	WB/D42-86°	97	90
		50	WB/D50-86°	99	95
Oak		42	WD/D42-86°	97	90
		50	WD/D50-86°	99	95

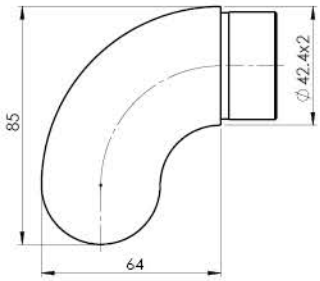

Quality	Finish	art.
AISI304	satin	A/0739-242-R

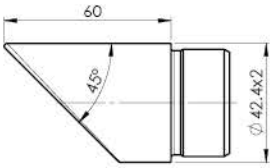

Quality	Finish	art.
AISI304	satin	A/0737-242

END CAPS

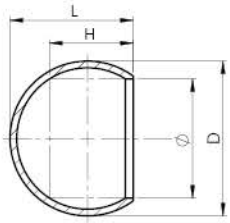

Quality	Finish	∅	art.	D	L	H
AISI304	satin	33,7	A9/33	47	38	27
		42,4	A9/42	55	44	30
		48,3	A9/48	65	52	38
AISI316		42,4	A14/9-42	55	44	30

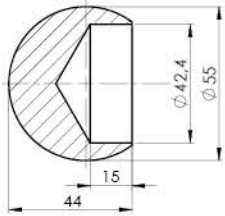

Quality	Finish	art.
Beech	natural	WB/D42-G55
Oak		WD/D42-G55

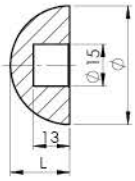

Quality	Finish	∅	art.	L
AISI 304	satin	42	WA/D42-G2	21
		50	WA/D50-G2	25

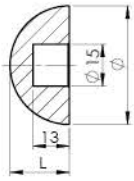

Quality	Finish	∅	art.	L
Beech	natural	42	WB/D42-G2	20
		50	WB/D50-G2	22
Oak		42	WD/D42-G2	20
		50	WD/D50-G2	22

top

END CAPS

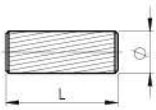

Quality	Finish	∅	art.	L
Beech	natural	15	WOOD/D15x40	40
		20	WOOD/D20x100	100

Quality	Finish	art.	M
Fe	Zinc	WOOD/M8-D	8
		WOOD/M10-D	10
		WOOD/M12-D	12

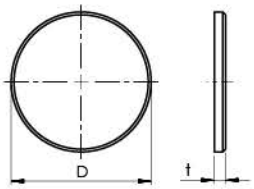

Quality	Finish	D	art.	t	
AISI304	satin	33	A/1732-033	4	
		40	A/1732-040		
		42	A/1732-042		top
		48	A/1732-048		
		50	A/1732-050		
		60	A/1732-060		
		80	A/1732-080		
		100	A/1732-100		new
			A/1732-100x6	6	new
		120	A/1732-120x6		new
	polish	42	A/1732-042-L	4	
		48	A/1732-048-L		
		50	A/1732-050-L		
	raw	42	A/1732-042-N		

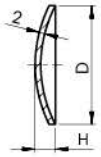

Quality	Finish	D	art.	H
AISI304	satin	33	A/1733-033	6
		42	A/1733-042	7
		48	A/1733-048	8

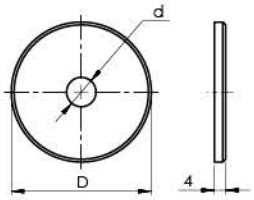

Quality	Finish	D	art.	d	
AISI304	satin	33	A/1732-033-12	12,5	new
		40	A/1732-040-12	12,5	new
		50	A/1732-050-10	10,5	

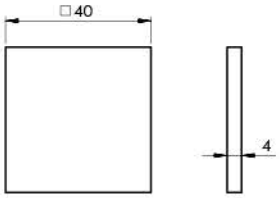

Quality	Finish	art.
AISI304	satin	A/1734-040

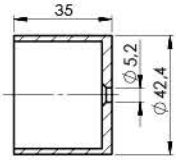

Quality	Finish	art.
AISI304	satin	A20/0729-042-R

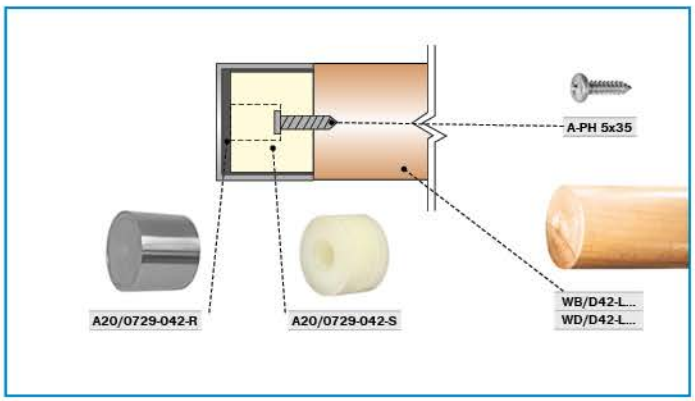

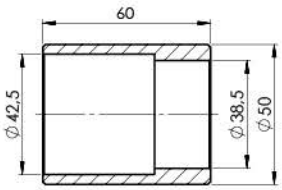

Quality	Finish	Ø	art.	L	D
ALUMINIUM	raw	42,4	A20/0000-042	60	50

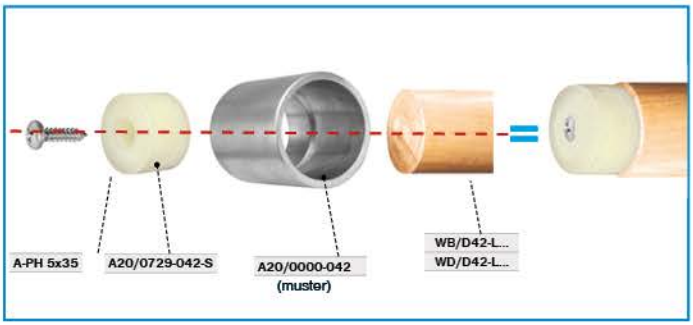

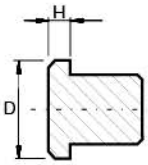

Quality	Finish	D	art.	H
AISI304	satin	12x1,5	A10/0010-012	3
		16x1,5	A10/0010-016	

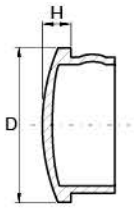

Quality	Finish	D	art.	H
AISI316	satin	12x1,0-1,5	A14/0014-012	3
		16x1,0-2,0	A14/0014-016	3,5
		42,4x2,0-2,6	A14/0014-042	7,5

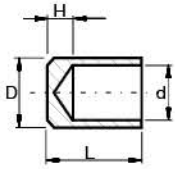

Quality	Finish	d	art.	D	L	H
AISI304	satin	10	A10/0015-010	15	15	5
		12	A10/0015-012-A			
		14	A10/0015-014	16		
		16	A10/0015-016	18	21	6
	polish	12	A10/0015-012-L	14	15	5
		14	A10/0015-014-L	16		
		16	A10/0015-016-L	18	21	6
AISI316	satin	12	A14/0015-012-A	15	15	5
		14	A14/0015-014	16		
		16	A14/0015-016	18	21	6

top

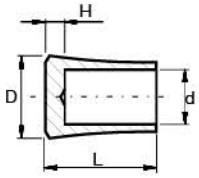

Quality	Finish	d	art.	D	L	H
AISI304	satin	10	A10/0017-010	18	22	2
		12	A10/0017-012			

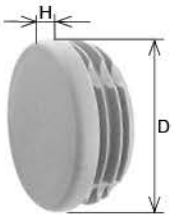

Quality	Finish	D	art.	H
PVC	gray	42,4 x2,0	A9/42-PVC	5

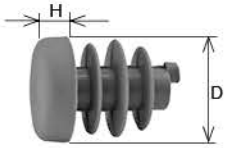

Quality	Finish	D	art.	H
PVC	gray	12 x 1,5	A10/12-PVC	4
		16 x 1,5	A10/16-PVC	5

Quality	Finish	DxD	art.	H
PVC	gray	40x40	A9/40x40-PVC	5

new

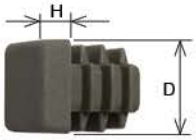

Quality	Finish	DxD	art.	H
PVC	gray	12x12	A9/12x12-PVC	4

new

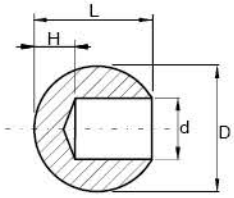

Quality	Finish	d	art.	D	L	H
AISI304	satin	10	A/0221-010	20	19	7
		10	A/0221-2510	25	23	10
		12	A/0221-012	20	18	5
		12	A/0221-2512	25	24	12
		12	A/0221-3012	30	28	8
		14	A/0221-2514	25	22	8
		14	A/0221-014	20	17	6
		16	A/0221-016	25	22	9
	polish	12	A/0221-012-L	20	18	6
		14	A/0221-014-L	20	17	6
		16	A/0221-016-L	25	22	9
AISI316	satin	12	A14/0221-012	20	18	6
	polish	12	A14/0221-012-L	20	118	6

top

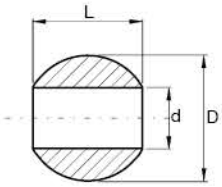

Quality	Finish	d	art.	D	L
AISI304	satin	12	A/0224-2012	20	15,5
		12	A/0224-2512	25	22
		12	A/0224-3012	30	27
		14	A/0224-3014	30	26

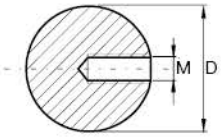

Quality	Finish	D	art.	M
AISI304	satin	15	A/0220-015	6
		20	A/0220-020	
		25	A/0220-025	
		30	A/0220-030	
		40	A/0220-040	8
		50	A/0220-050	

new
new

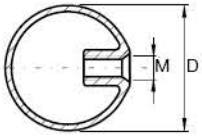

Quality	Finish	D	art.	M
AISI304	satin	40	A/0220-040-R	8
		50	A/0220-050-R	8
		50	A/0220-050-R-B	10
		60	A/0220-060	8
		70	A/0220-070	8
		80	A/0220-080	12
		80	A/0220-080-R	10
		100	A/0220-100	10
		120	A/0220-120	10
		150	A/0220-150	10
		200	A/0220-200	12
	polish	50	A/0220-050-R-L	8
		80	A/0220-080-R-L	10

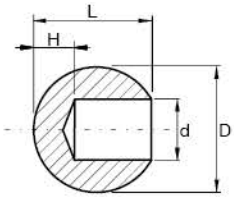

Quality	Finish	d	art.	D	L	H
Brass	polish	12	B/0221-2512	25	23	7

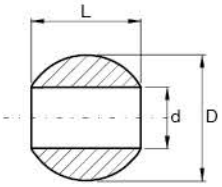

Quality	Finish	d	art.	D	L
Brass	polish	12	B/0224-2512	25	22

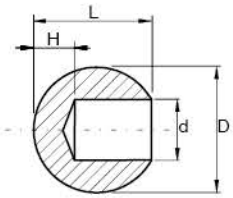

Quality	Finish	d	art.	D	L	H
Beech	natural	8	WB/D20-d8	20	19	9
		12	WB/D20-d12		18	8
Oak		8	WD/D20-d8	20	19	9
		12	WD/D20-d12		18	8

4.8 FLANGES, BASE COVERS

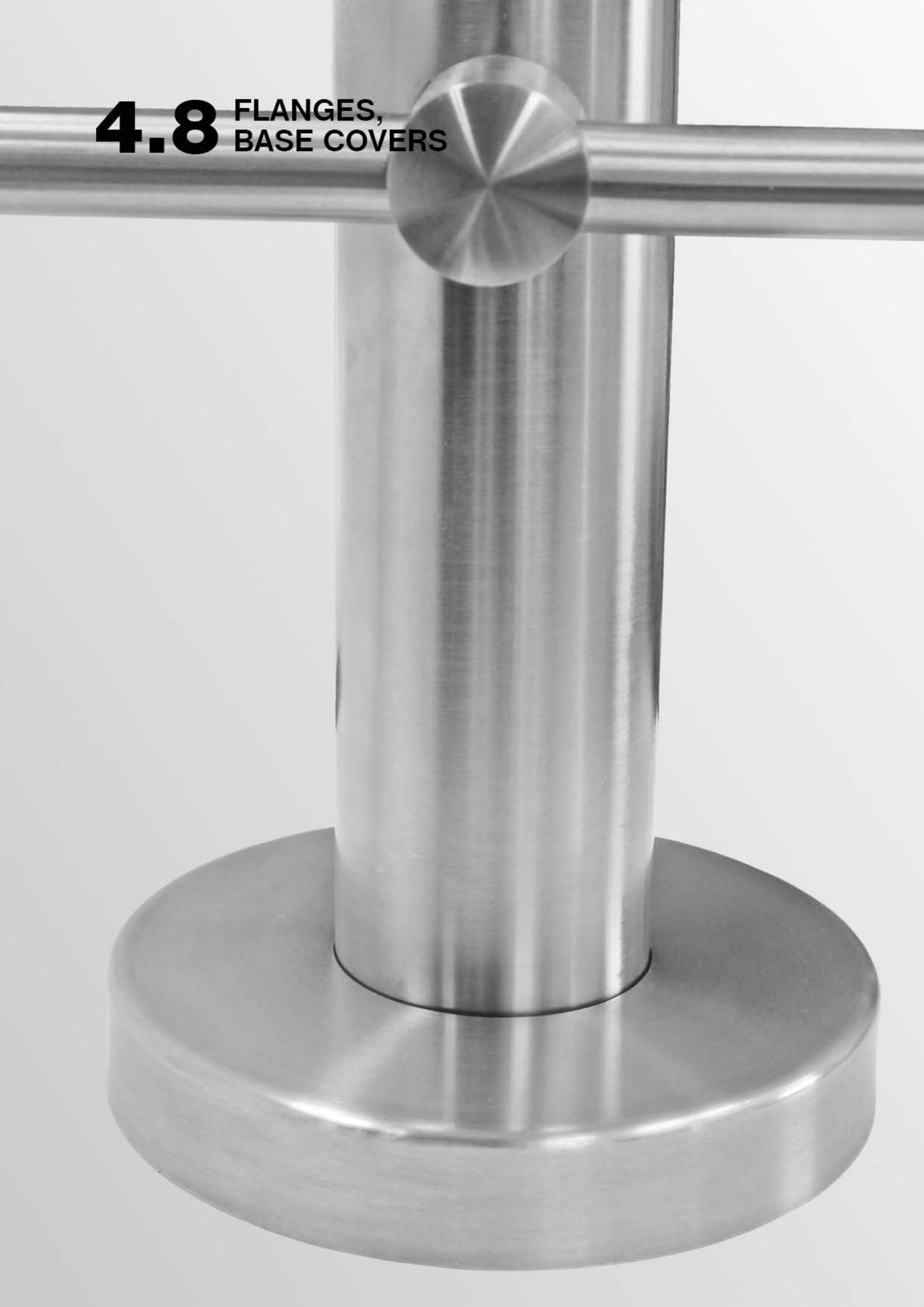

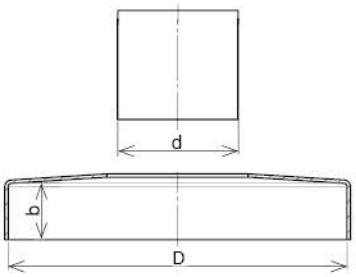

Quality	Finish	d	D	b	art.	
AISI304	satin	33,7	103	17	A/0512-033	
		42,4	73	11	A/0515-042-B	
			83	10	A/0516-042	
			88	12	A6/90x42x13-S	
			88	14	A6/90x42x13-B	
			103	17	A/0512-042	top
			103	21	A6/105x42x25	
			123	24	A/0513-042	
		48,3	103	17	A/0512-048	
			103	22	A6/105x48x25	
		50,0	103	17	A/0512-050	
	polish	42,4	73	11	A/0515-042-L	
			88	12	A6/90x42x13-L	
			103	15	A/0512-042-B-L	
			103	17	A/0512-042-L	
AISI316	satin	42,4	103	17	A14/0512-042	
			103	22	A14/105x42x25	
		48,3	103	17	A14/0512-048	
			103	23	A14/105x48x25	
			123	16	A14/0513-048	
		50,0	103	17	A14/0512-050	new
	polish	42,4	103	17	A14/0512-042-L	

Quality	Finish	d	D	b	art.
AISI316	satin	12	43,5	12	A14/0517-012
		42	103,5	17	A14/0517-042

Quality	Finish	d	D	b	art.
AISI304	satin	-	88	11	A6/90x00x13-S
		-	103	17	A/0512-000

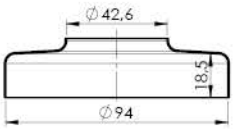

Quality	Finish	art.	
AISI304	satin	A6/018-042	new
	polish	A6/018-042-L	new

Quality	Finish	d	D	b	art.	
AISI304	satin	12	43	12	A/0514-012-B	top
			58	11	A6/60x12x12	
			72	11	A/0515-012	
				13,5	A/0515-012-B	
		14	43,6	11	A/0514-014	
	polish	12	43	12	A/0514-012-L	
AISI316	satin	12	43	12	A14/0514-012	

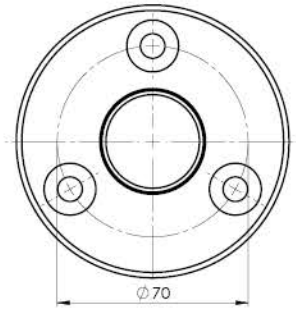

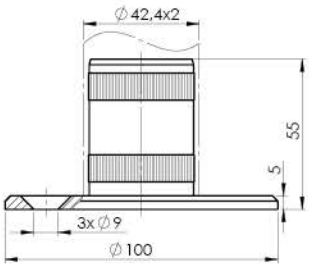

Quality	Finish	art.
AISI304	satin	A/0942-242
AISI316		A14/0942-242

new

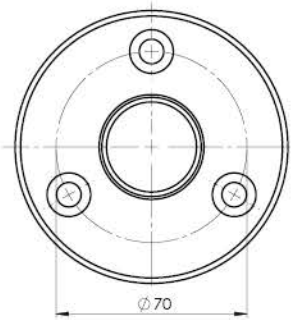

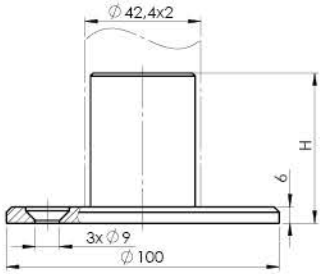

Quality	Finish	art.	H
AISI304	satin	A/0941-242x55	55
		A/0941-242x120	120

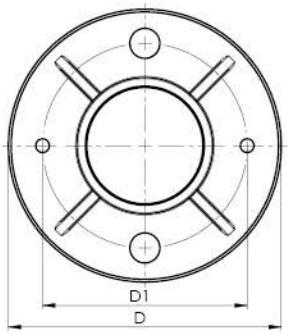

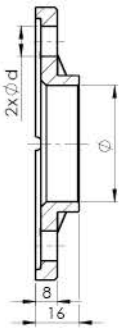

Quality	Finish	∅	art.	D	d	D1
AISI304	raw	33,7	A/0940-033-N	100	11	70
		42,4	A/0940-042-N			75
		42,4	A/0940-042-N-B		9	
		48,3	A/0940-048-N-B			
AISI316		42,4	A14/0940-042-N		11	
		48,3	A14/0944-048-N	120		90

top

new

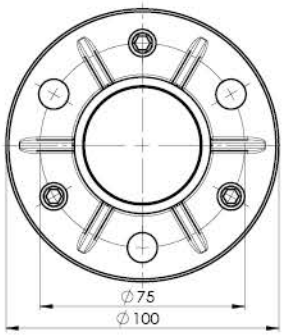

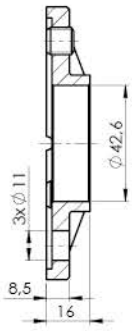

Quality	Finish	art.
AISI304	raw	A/0943-100x42

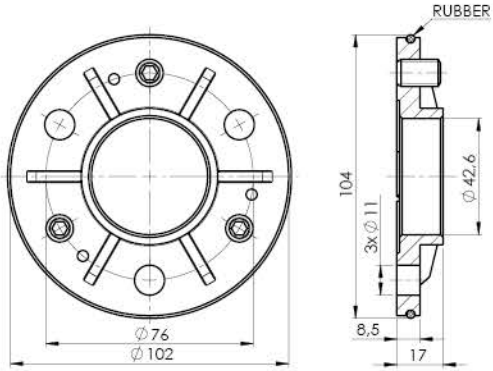

Quality	Finish	art.
AISI304	raw	A14/0949-042-N

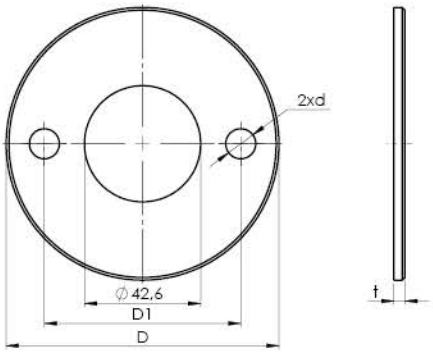

Quality	Finish	art.	D	d	D1	t
AISI304	raw	A/0948-042	100	11	75	6
		A/1951-85x42x4-N	85	9	68	4
		A/1951-100x42x4-N	100	11	72	4

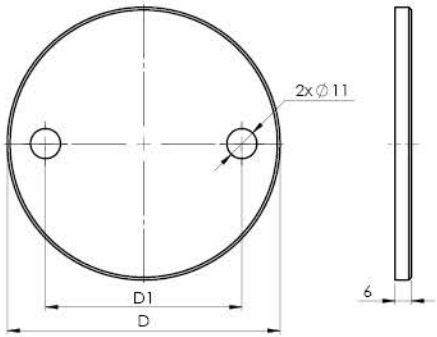

Quality	Finish	art.	D	D1	
AISI304	satin	A/1950-100	100	72	
		A/1950-100-B			
		A/1950-120	120	87	new

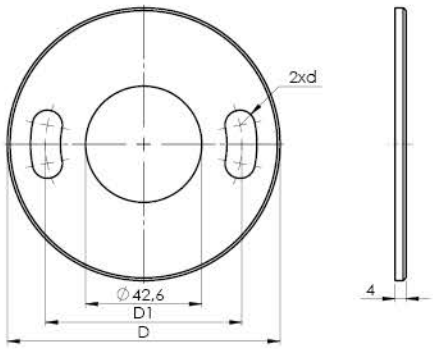

Quality	Finish	art.	D	d	D1	
AISI304	raw	A/1952-85x42x4-N	85	9x20	68	new
		A/1952-100x42x4-N	100	11x25	72	new

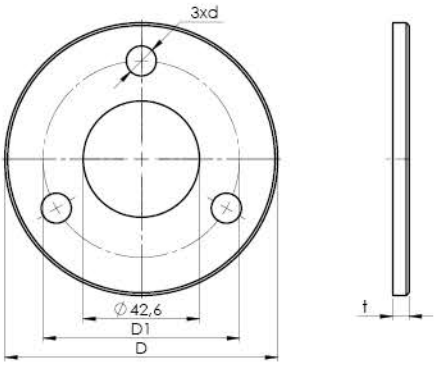

Quality	Finish	art.	D	d	D1	t	
AISI304	satin	A6/85x42x6-S	85	8,5	65	6	
		A6/100x42x6-B	100	11	70	6	new
		A6/100x42x6-S	100	11	73	6	top
		A6/120x42x6-S	120	11	80	6	
		A6/85x42x4-N	85	9	68	4	
		A6/100x42x4-N	100	11	72	4	
AISI316		A14/100x42x6-S	100	11	71	6	

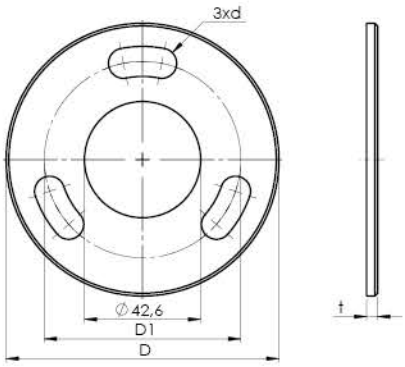

Quality	Finish	art.	D	d	D1	t	
AISI304	raw	A/0946-85x4-N	85	9x20	68	4	new
		A/0946-100x4-N	100	11x25	72	4	new
		A/0946-042-N			77	6	

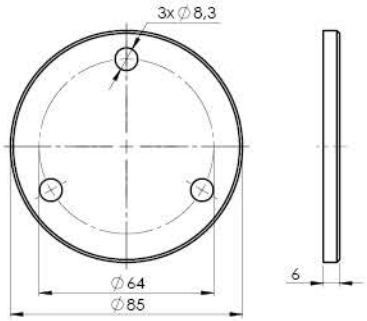

Quality	Finish	art.
AISI304	satin	A6/85x00x6-S

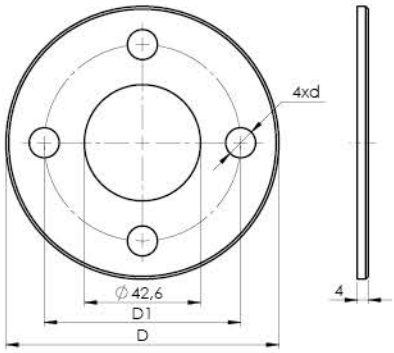

Quality	Finish	art.	D	d	D1
AISI304	raw	A/1954-85x42x4-N	85	9	68
		A/1954-100x42x4-N	100	11	72

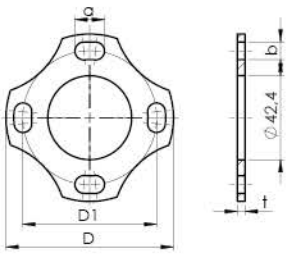

Quality	Finish	art.	D	axb	D1	t
AISI304	raw	A6/85x42x4-N	85	9x15	68	4
		A6/100x42x4-N	100	11x20	75	6

new

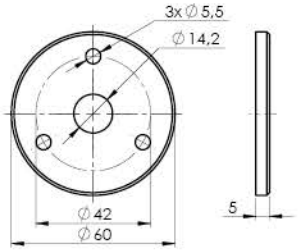

Quality	Finish	art.
AISI304	satin	A/0112-LED-PLATE

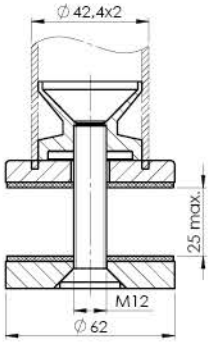

Quality	Finish	art.
AISI304	satin	A6/42-62

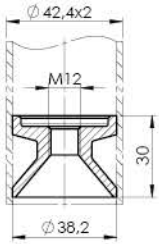

Quality	Finish	art.
AISI304	satin	A/3501-042

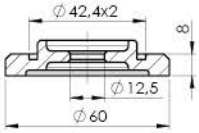

Quality	Finish	art.
AISI304	satin	A/0501-042

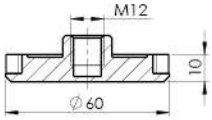

Quality	Finish	art.
AISI304	satin	A/0731-060

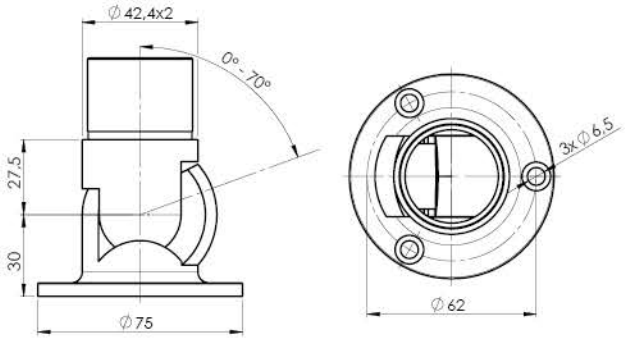

Quality	Finish	∅	art.
AISI304	satin	42,4x2	A/0506-242

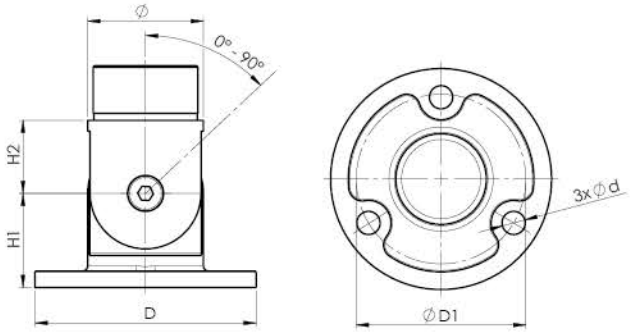

Quality	Finish	∅	art.	D	H1	H2	d
AISI304	satin	33,7x2	A/0945-233	71	30	21	6,5
		42,4x2	A/0945-242-B	81	35	27	8,5
AISI316		42,4x2	A14/0945-242-B				
		42,4x2	A14/0945-242-C	80	38	27	9

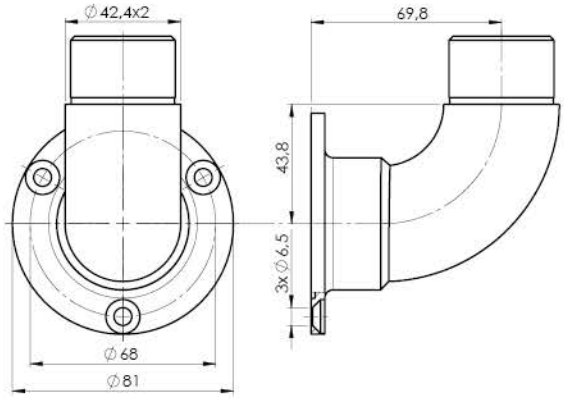

Quality	Finish	∅	art.
AISI304	satin	42,4x2	A/0507-242
AISI316			A14/0507-242

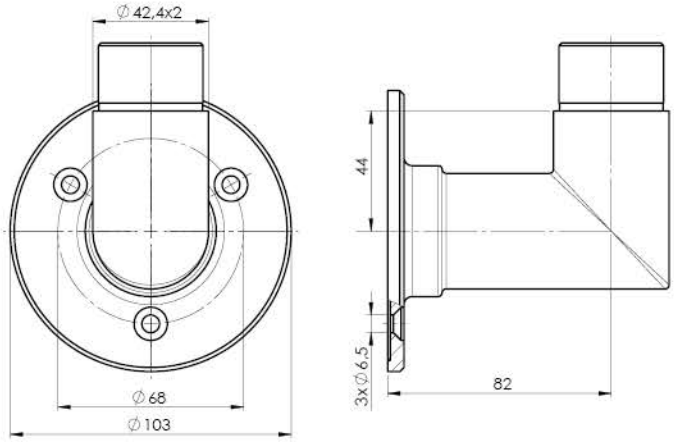

Quality	Finish	∅	art.
AISI304	satin	42,4x2	A/0509-242

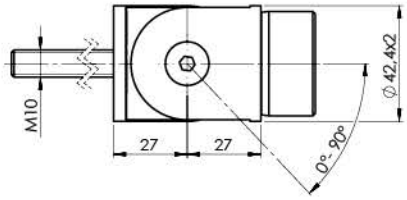

Quality	Finish	∅	art.	
AISI304	satin	42,4x2	A/0315-242	new

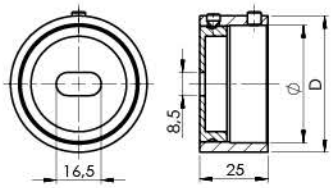

Quality	Finish	∅	art.	D	
AISI304	satin	42,4	A/0504-242	50	top
		48,3	A/0504-248	56	
	polish	42,4	A/0504-242-L	50	
AISI316	satin	42,4	A14/0504-242	50	

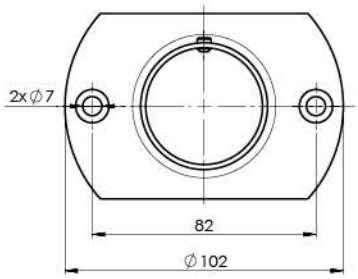

Quality	Finish	∅	art.
AISI304	satin	42,4	A/0503-042

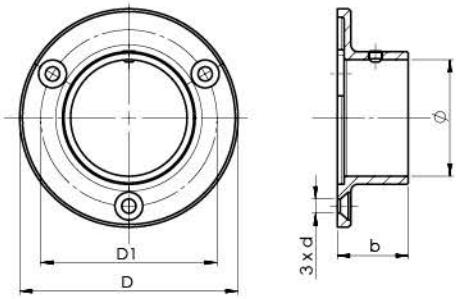

Quality	Finish	∅	art.	D	b	d	
AISI304	satin	33,7	A/0505-033	85	30	5	
			A/0505-033-B (WELD)	85	30		
		42,4	A/0505-042	95	30		
			A/0505-042-B	80	25	5,5	top
		48,3	A/0505-048	100	30	6,5	
			A/0505-048-B	90	25	5	
	polish	42,4	A/0505-042-L	95	30		
			A/0505-042-B-L	82	25	6,5	
		48,3	A/0505-048-L	100	35	5	
			A/0505-048-B-L	100	25	6,5	
AISI316	satin	42,4	A14/0505-042	82	30	5	new
			A14/0505-042-B	80	25		new
		48,3	A14/0505-048	100	28	5,5	
	polish	42,4	A14/0505-042-B-L	82	25	6,5	new
		48,3	A14/0505-048-L	100	28	5,5	

Quality	Finish	art.
Fe	Zinc	A6/80x5-M16

wood

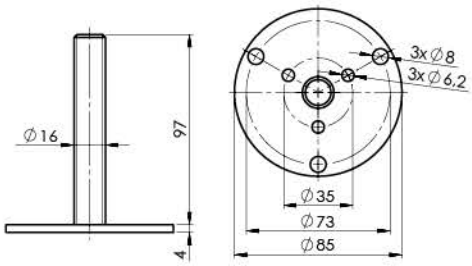

Quality	Finish	art.
AISI304	satin	A/W718-000

new

wood

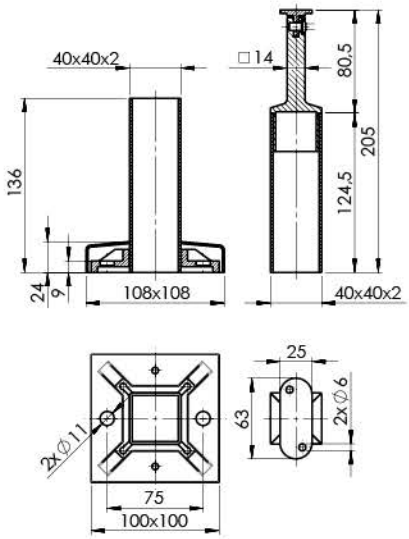

Quality	Finish	art.
AISI304	satin	A/W718-242

new

wood

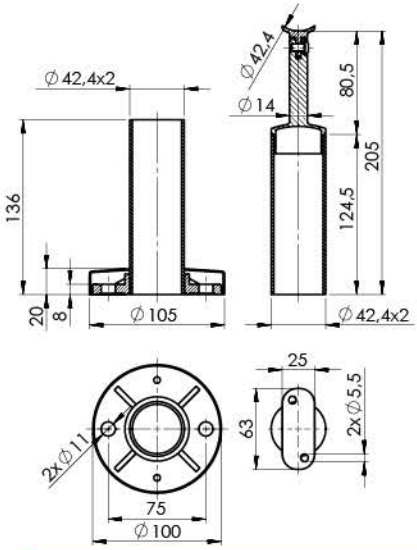

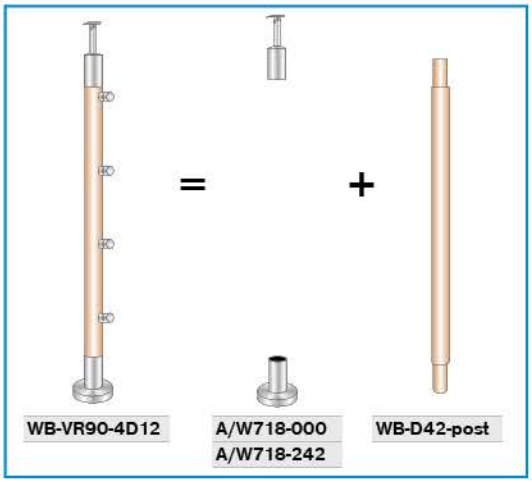

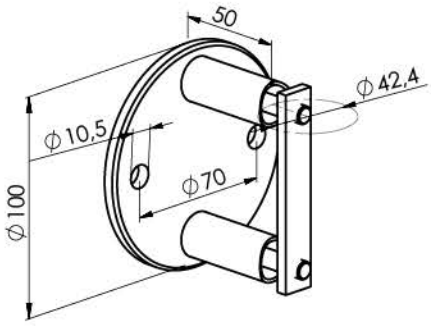

Quality	Finish	∅	art.
AISI304	satin	42,4	A6/021-6-A
	polish	42,4	A6/021-6-L
AISI316	satin	42,4	A14/021-6-A

top

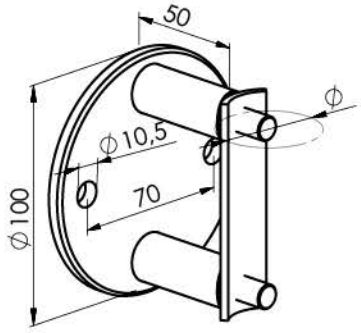

Quality	Finish	∅	art.
AISI304	satin	33,7	A6/021-033
		42,4	A6/021-6-A/B
		48,3	A6/021-048

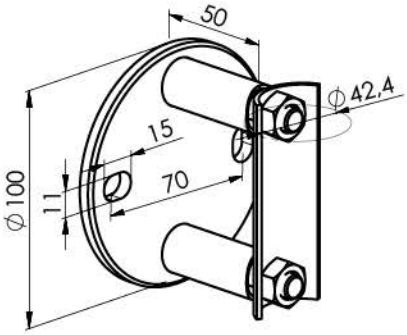

Quality	Finish	art.
AISI304	satin	A6/021-6-A/C

new

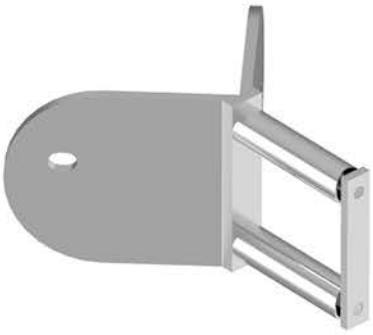

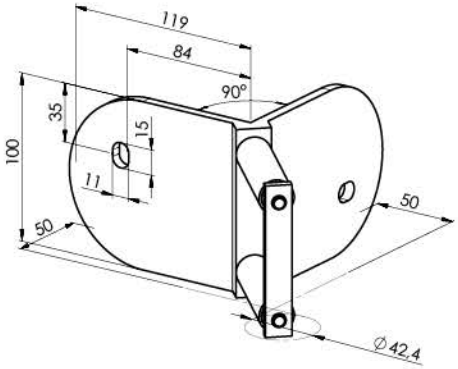

Quality	Finish	∅	art.
AISI304	satin	42,4	A6/024-OUT
AISI316			A14/024-OUT

new

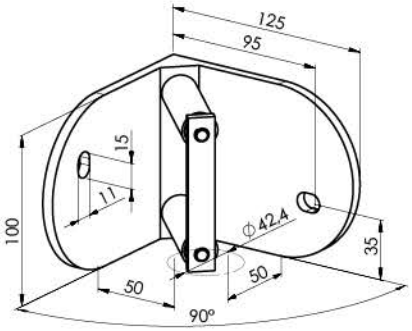

Quality	Finish	∅	art.
AISI304	satin	42,4	A6/024-IN
AISI316			A14/024-IN

new

ECONOMY variant

A14/021-6-OUT-11x20

A14/021-6-OUT-11x20-B

A14/021-6-IN-11x20

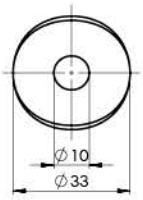

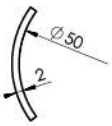

Quality	Finish	art.
AISI304	satin	A/1732-033-R25

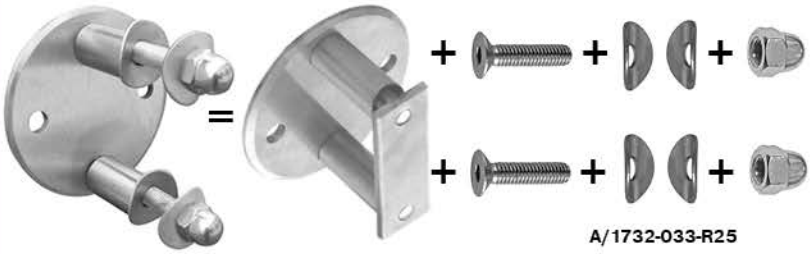

A6/48 A6/021-6-A A-DIN 7991-A2 M8x110 A-DIN 1587-A2 M8

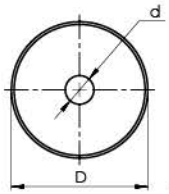

Quality	Finish	D	art.	d
AISI304	satin	33	A/1732-033-12	12,5
		40	A/1732-040-12	
		50	A/1732-050-10	10,5

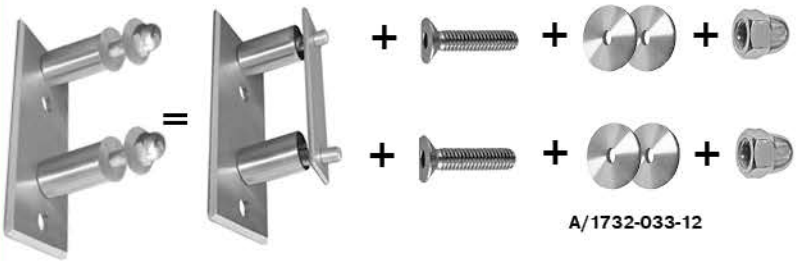

A6/005-4W A6/005-4 A-DIN 7991-A2 M8x110 A-DIN 1587-A2 M8

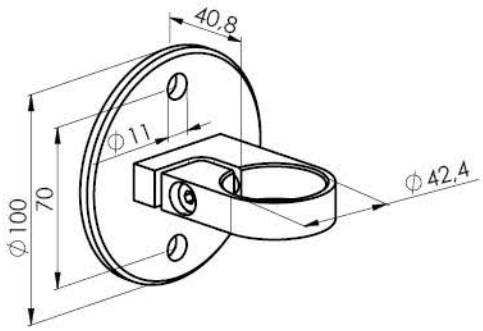

Quality	Finish	art.
AISI304	satin	A6/42

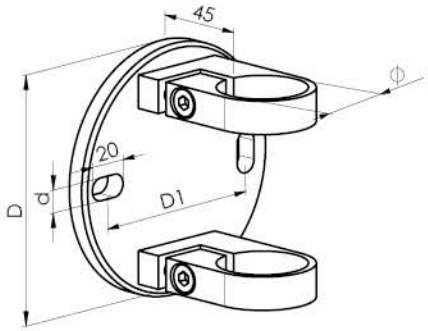

Quality	Finish	⌀	art.	D	d
AISI304	satin	42,4	A6/2x42	120	11
		42,4	A6/2x42-150	150	14
AISI316		42,4	A14/2x42	120	11
		48,3	A14/2x48-150	150	11

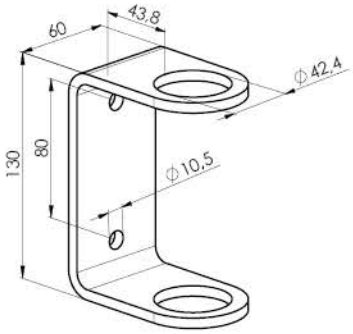

Quality	Finish	art.
AISI304	satin	A6/42-130x60

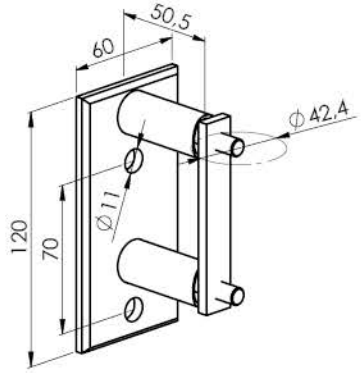

Quality	Finish	⌀	art.
AISI304	satin	42,4	A6/004-6
	polish	42,4	A6/004-6-L

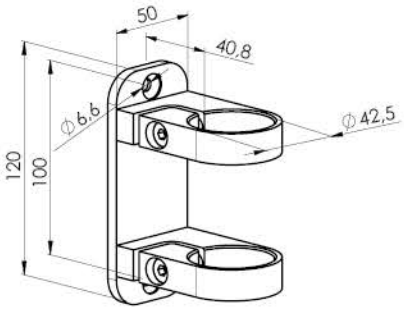

Quality	Finish	art.
AISI304	satin	A6/42-120x50

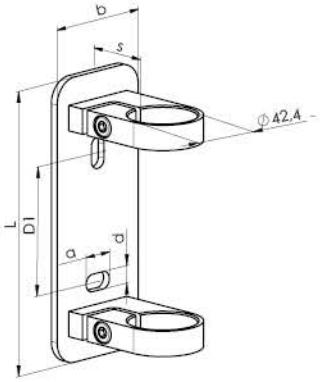

Quality	Finish	∅	art.	L x b	s	d x a	D1
AISI304	satin	42,4	A6/42-180x70	180x70	40	11x20	81,5
		42,4	A6/42-180x70-B		35		
AISI316		42,4	A14/42-135x54	135x54	36	11x13	70

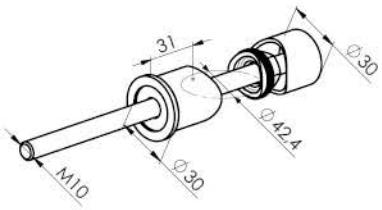

Quality	Finish	art.
AISI304	satin	A6/42-20-B

top

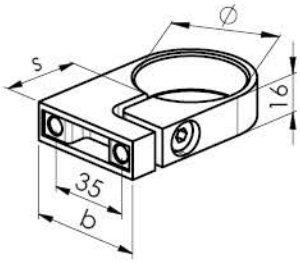

Quality	Finish	∅	art.	H	s	b
AISI304	satin	33,7	A/3507-033	16	36	46
		42,4	A/3507-042		35	50
AISI316		42,4	A14/3507-042			50
		48,3	A14/3507-048			55

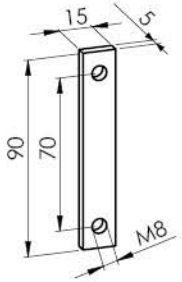

Quality	Finish	art.	L
AISI304	satin	A/012-45	45
		A/012-120	120
AISI316		A14/012-45	45

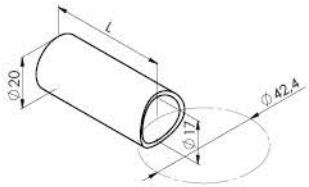

Quality	Finish	art.
AISI316	satin	A14/021-6-plate

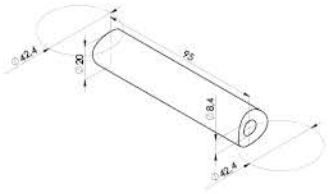

Quality	Finish	art.
AISI304	satin	A/012-95

new

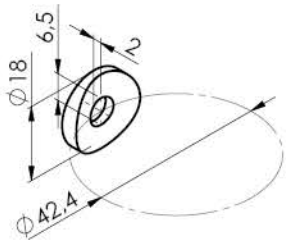

Quality	Finish	art.
AISI316	satin	A14/012-02

new

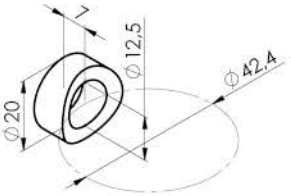

Quality	Finish	art.
AISI304	satin	A/012-07

4.9 SQUARE SYSTEM

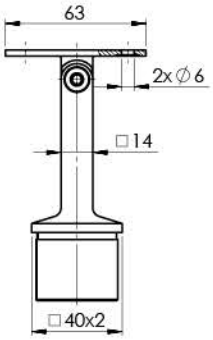

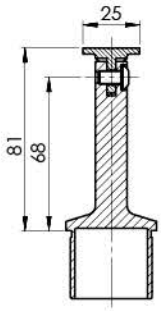

Quality	Finish	art.	H
AISI304	satin	A/4718-000	81
		A/4718-000-B	80,5
AISI316		A14/4718-000	81

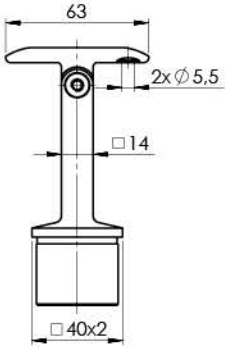

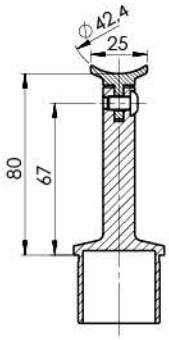

Quality	Finish	art.
AISI304	satin	A/4718-042
AISI316		A14/4718-042

top

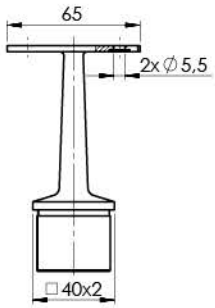

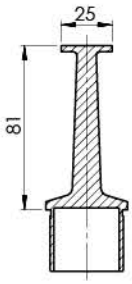

Quality	Finish	art.
AISI316	satin	A14/4710-000

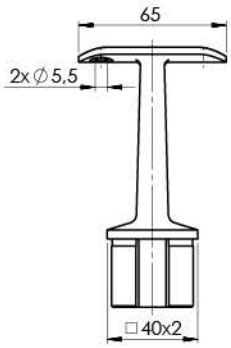

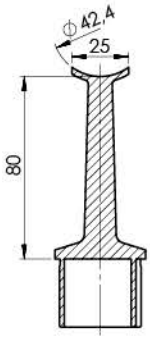

Quality	Finish	art.
AISI316	satin	A14/4710-042

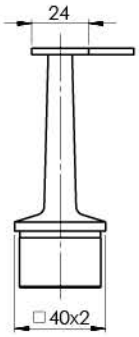

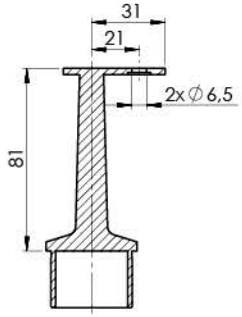

Quality	Finish	art.
AISI304	satin	A/4710-800
		A/4710-800-B
AISI316		A14/4710-800

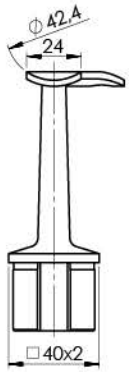

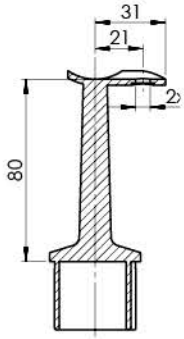

Quality	Finish	art.
AISI304	satin	A/4710-842
		A/4710-800-B
AISI316		A14/4710-842

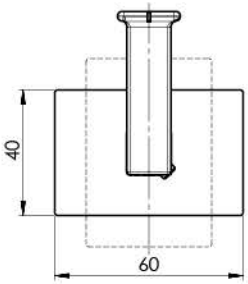

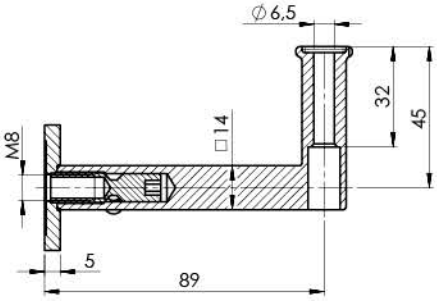

Quality	Finish	art.
AISI304	satin	A/4111-000

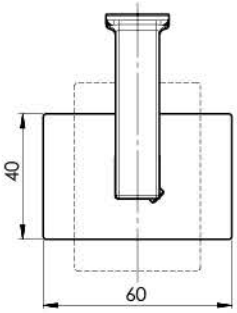

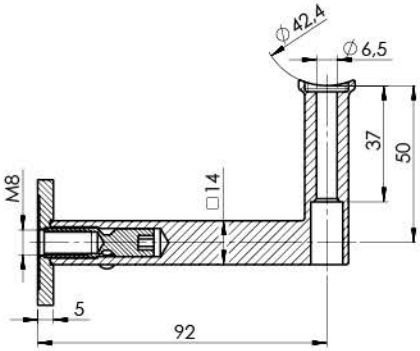

Quality	Finish	art.
AISI304	satin	A/4111-042

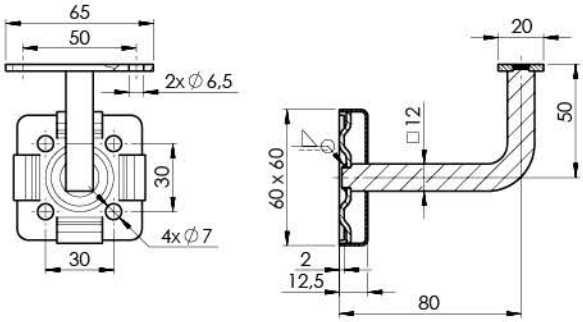

Quality	Finish	art.
AISI304	satin	A/4110-000

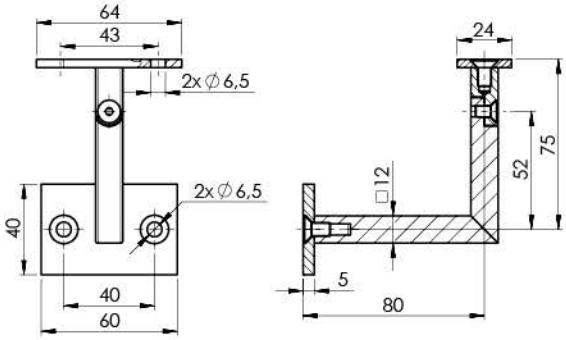

Quality	Finish	art.
AISI304	satin	A/4145-000

new

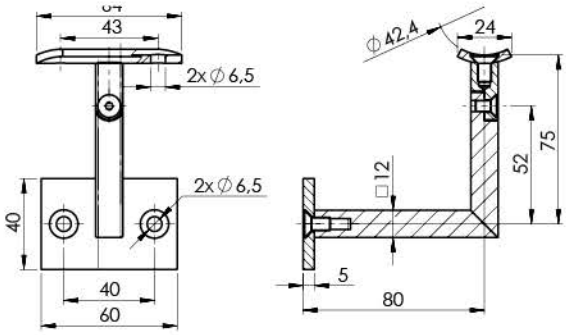

Quality	Finish	art.
AISI304	satin	A/4145-042

new

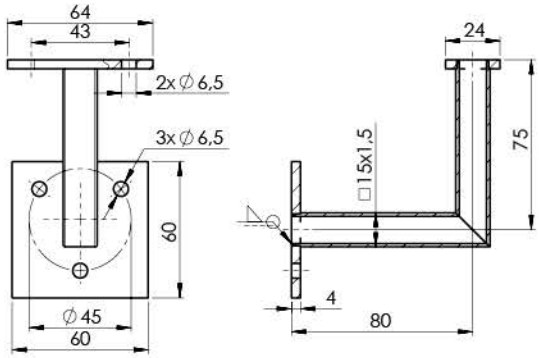

Quality	Finish	art.
AISI304	satin	A/4111-000-LED

new

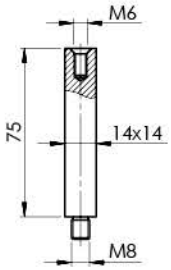

Quality	Finish	art.
AISI304	satin	A/4811-040

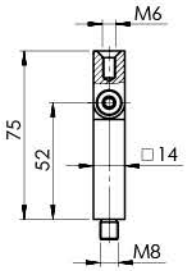

Quality	Finish	art.
AISI304	satin	A/4812-040

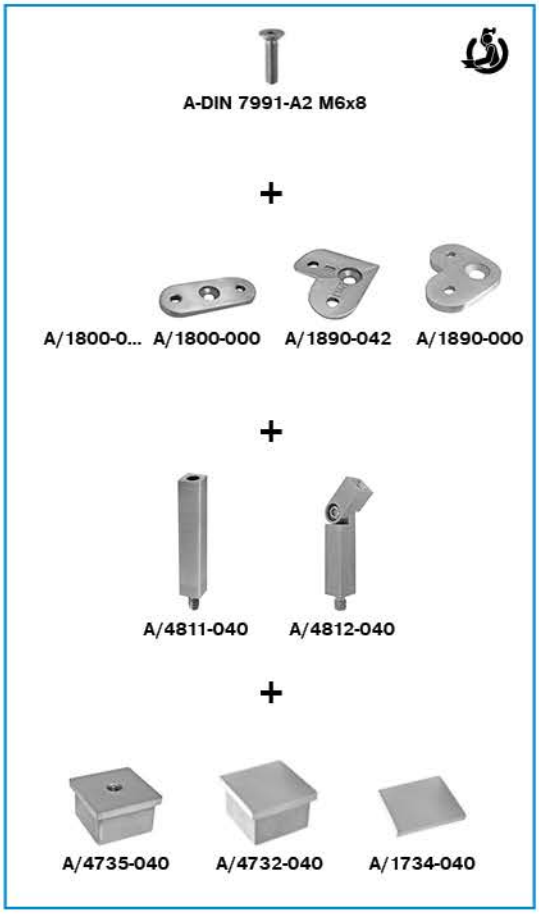

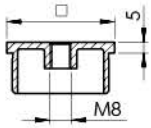

Quality	Finish	art.	⧄	
AISI304	satin	A/4735-030-R	30x30x2	
		A/4735-040-R	40x40x2	top
		A/4735-041-R	40x40x3	new
		A/4735-050-R	50x50x2	
		A/4735-060-R	60x60x2	
AISI316		A14/4735-040-R	40x40x2	

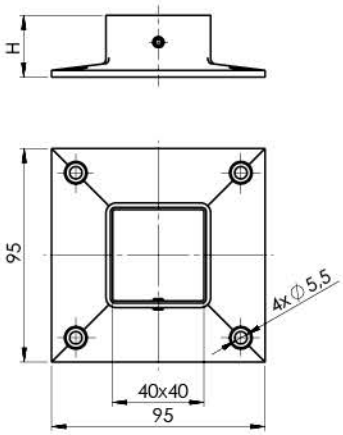

Quality	Finish	art.	H	
AISI304	satin	A/4505-040	28	new
AISI316		A14/4505-040	29	
		A14/4505-040-B	23	

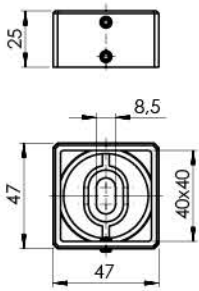

Quality	Finish	art.
AISI304	satin	A/4504-040

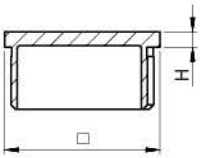

Quality	Finish	art.	⧄	H
AISI304	satin	A/4732-030	30x30x2	5
		A/4732-040	40x40x2	
		A/4732-040-B	40x40x2	
		A/4732-041	40x40x3	
		A/4732-050	50x50x2	
		A/4732-060	60x60x2	
AISI316		A14/4732-040	40x40x2	4

top

new

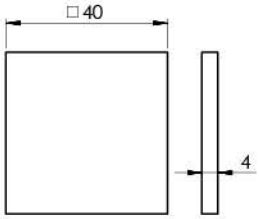

Quality	Finish	art.
AISI304	satin	A/1734-040
	raw	A/1734-040-N

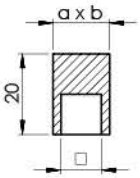

Quality	Finish	art.	⧄	axb
AISI304	satin	A10/4023-012	10x10	14x14
		A10/4023-12x12	12x12	16x16

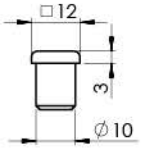

Quality	Finish	art.
AISI304	satin	A/4732-012

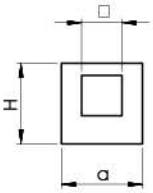

Quality	Finish	art.	⧄	a x b	H	R	L
AISI304	satin	A/4810-000	10x10	20 x 16	20		
		A/4810-000-C	12x10				
		A/4830-000	12x12	23 x 16			
		A/4830-000-B	12x12	31 x 22	22		
		A/4821-000	15x5	25 x 25	25		
		A/4822-000	15x5				left
		A/4823-000	15x5			right	

new

new

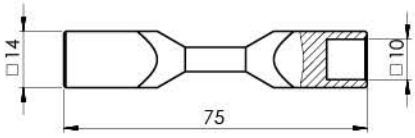

Quality	Finish	art.
AISI304	satin	A/4010-012

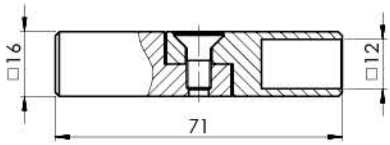

Quality	Finish	art.
AISI304	satin	A/4012-012

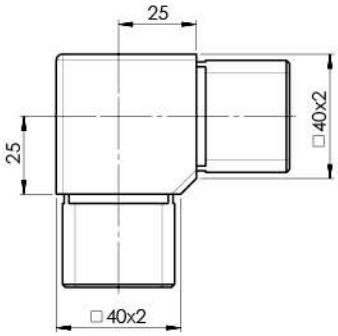

Quality	Finish	art.
AISI304	satin	A/4301-040
AISI316		A14/4301-040

top

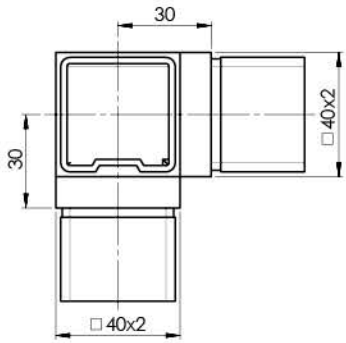

Quality	Finish	art.
AISI304	satin	A/4304-040
AISI316		A14/4304-040

new

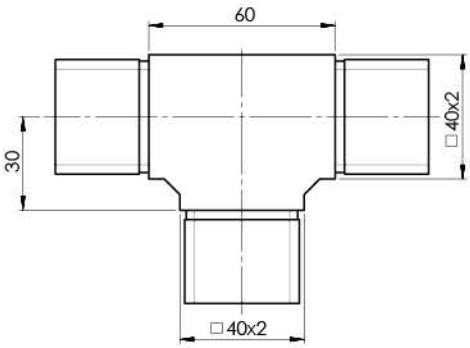

Quality	Finish	art.
AISI304	satin	A/4307-040
AISI316		A14/4307-040

new

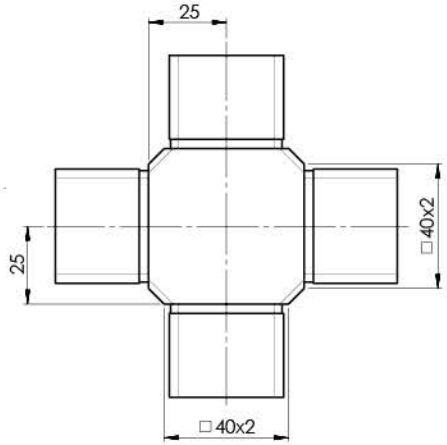

Quality	Finish	art.
AISI304	satin	A/4308-040

new

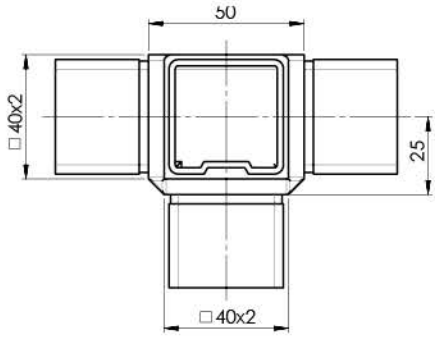

Quality	Finish	art.
AISI304	satin	A/4309-040

new

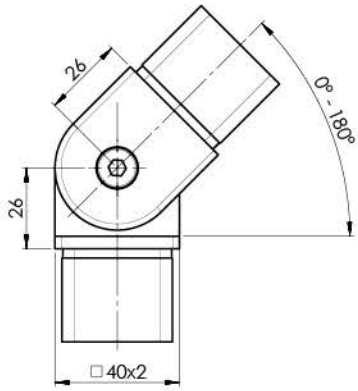

Quality	Finish	art.
AISI304	satin	A/4302-040
AISI316		A14/4302-040

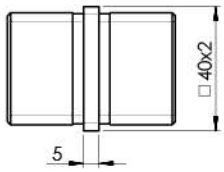

Quality	Finish	art.
AISI304	satin	A/4790-040
AISI316		A14/4790-040

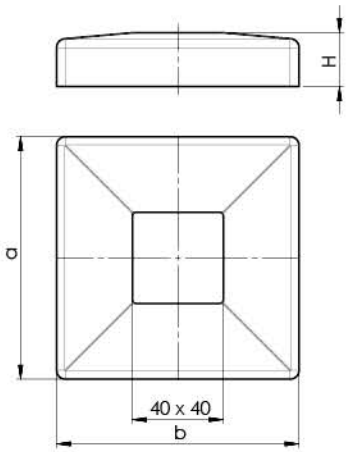

Quality	Finish	art.	axb	H
AISI304	satin	A/4511-9340	93x93	25
		A/4511-9640	96x96	20
		A/4511-040	108x108	24
AISI316		A14/4511-040		

top

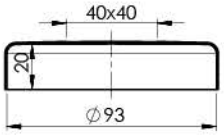

Quality	Finish	art.
AISI304	satin	A/4513-9340

new

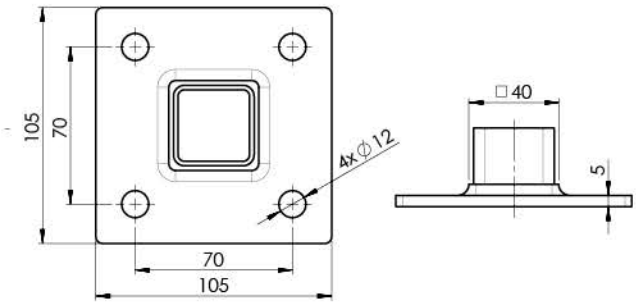

Quality	Finish	art.
AISI304	satin	A/4942-040
	raw	A/4942-040-N

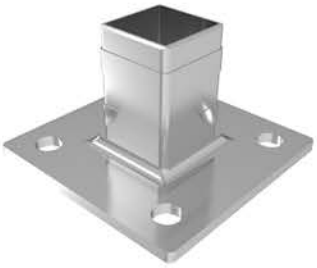

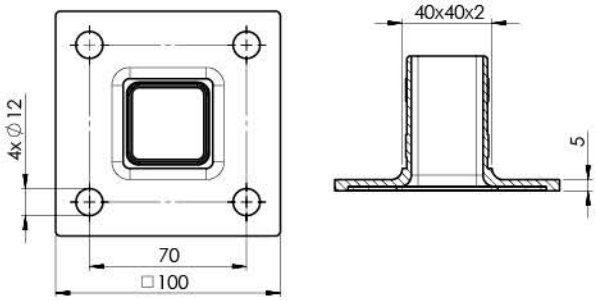

Quality	Finish	art.
AISI304	satin	A/4941-040

new

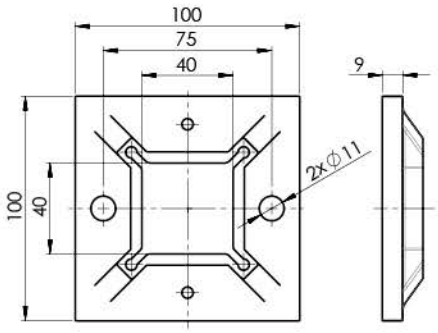

Quality	Finish	art.
AISI304	raw	A/4940-040
AISI316		A14/4940-040

top

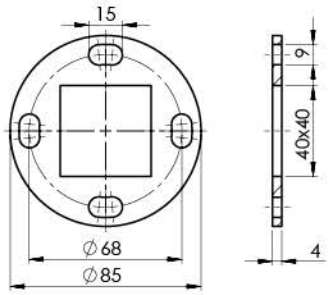

Quality	Finish	art.
AISI304	satin	A/1983-85

new

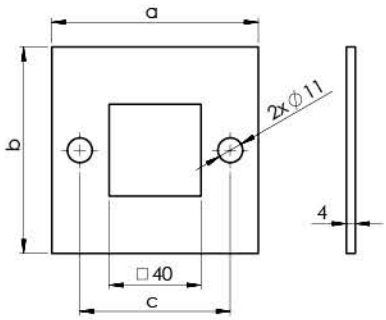

Quality	Finish	art.	axb	c
AISI304	raw	A/1981-088x40x4-N	88x88	65
		A/1981-092x40x4-N	92x92	67
		A/1981-100x40x4-N	100x100	70

new

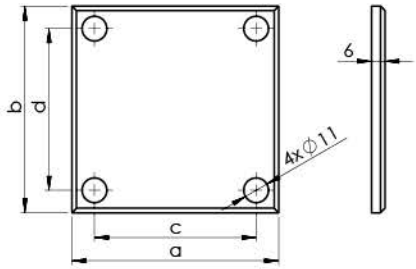

Quality	Finish	art.	a x b	cxd
AISI304	satin	A/1980-092	92x92	72x72
		A/1980-100	100x100	80x80

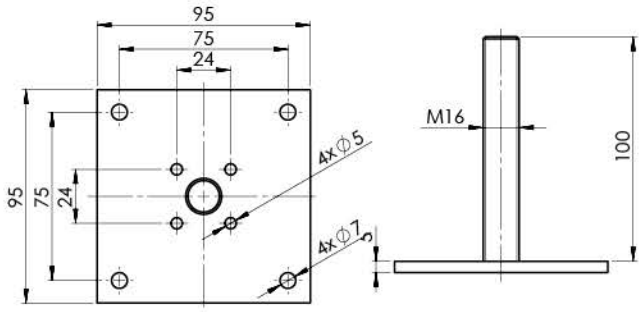

Quality	Finish	art.
Fe	Zinc	A6/95x95x5-M16

wood

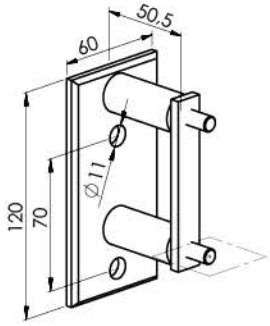

Quality	Finish	art.
AISI304	satin	A6/005-4
AISI316		A14/005-4

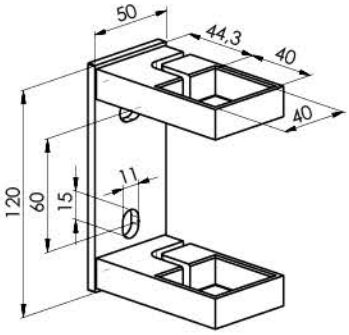

Quality	Finish	art.
AISI304	satin	A6/40-120x50

new

SQUARE SYSTEM

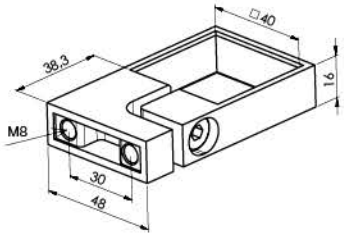

Quality	Finish	art.
AISI304	satin	A/3507-040

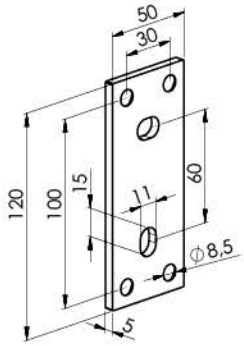

Quality	Finish	art.
AISI304	satin	A6/40-120x50-plate

new

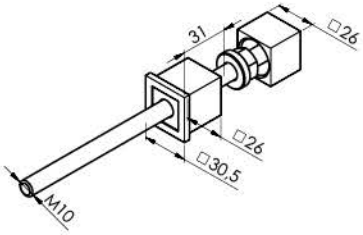

Quality	Finish	art.
AISI304	satin	A6/26x26-31

5 GLASS SYSTEMS

5.1 CANOPIES

Quality	Finish	Effect	art.	glass t	G max. (kN)	LED
ALUMINIUM	antracit	RAL	AL/PR1-S-EB-1400	10,76	1,0	✓

new

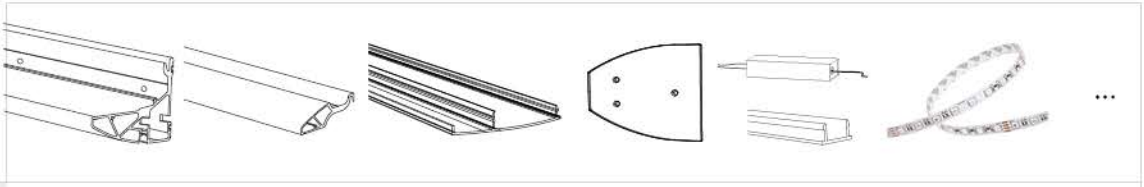

AL/PR1-S-EB-1400	1x	1x	1x	2x	1x LED set	...

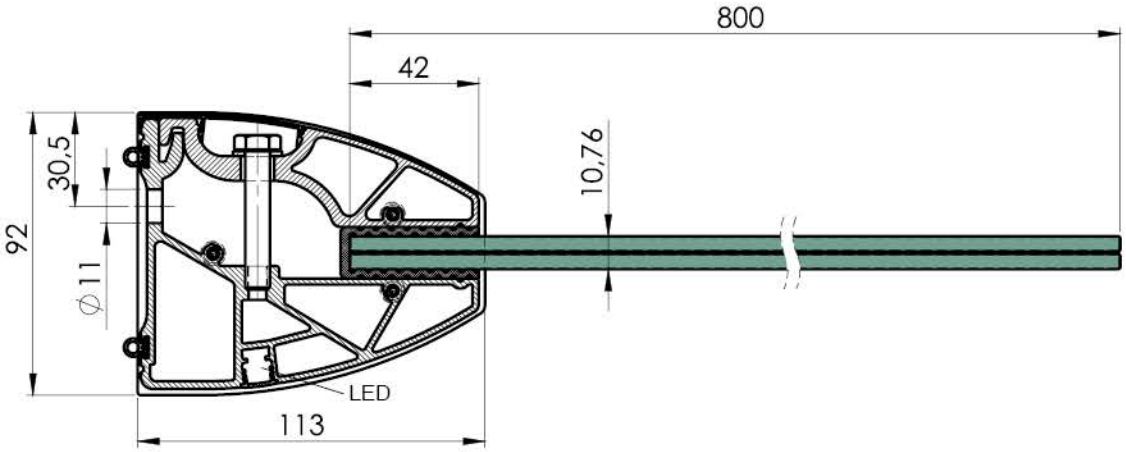

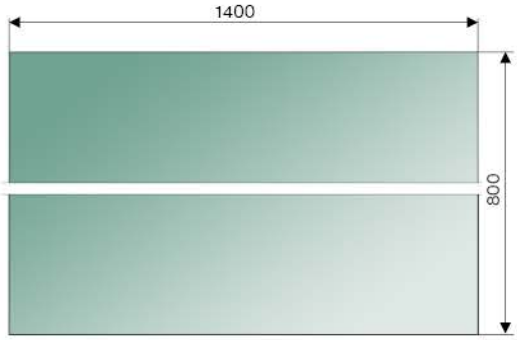

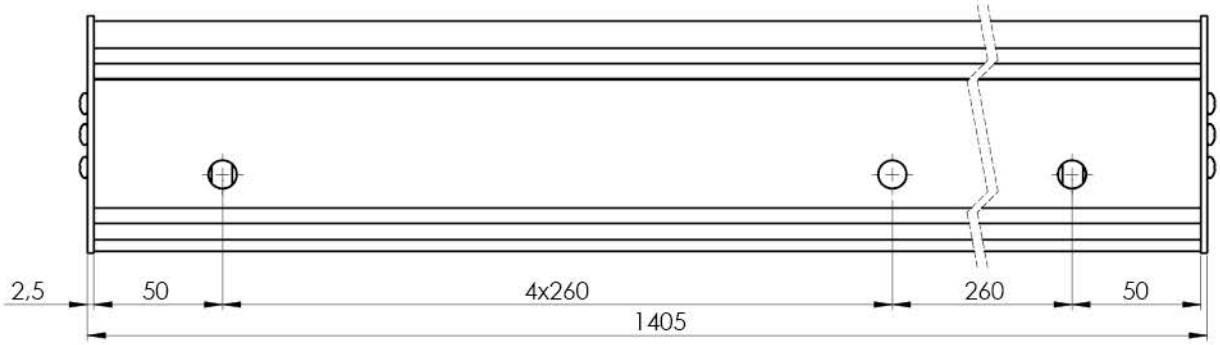

Quality	Finish	Effect	art.	glass t	G max. (kN)	
ALUMINIUM	natural	ELOX	AL/PR2-N-E-1750 AL/PR2-N-E-2500	17,52	1,5	✓

new

CERTIFICATED: Glass TVG/VSG

						...
AL/PR2-N-E-1750 AL/PR2-N-E-1750	1x	1x	1x	1x	6x 1m	...

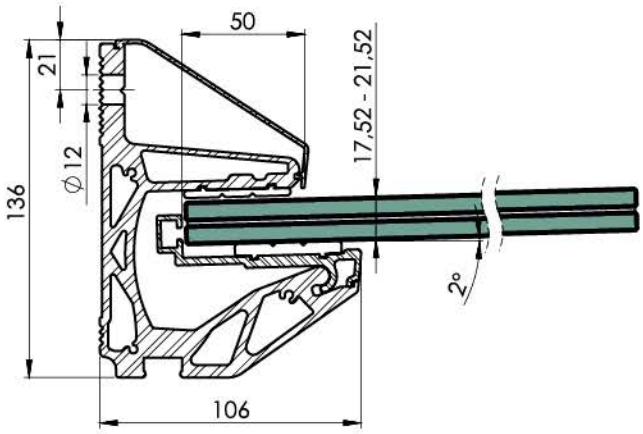

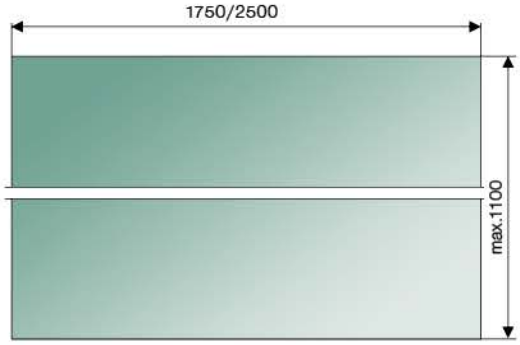

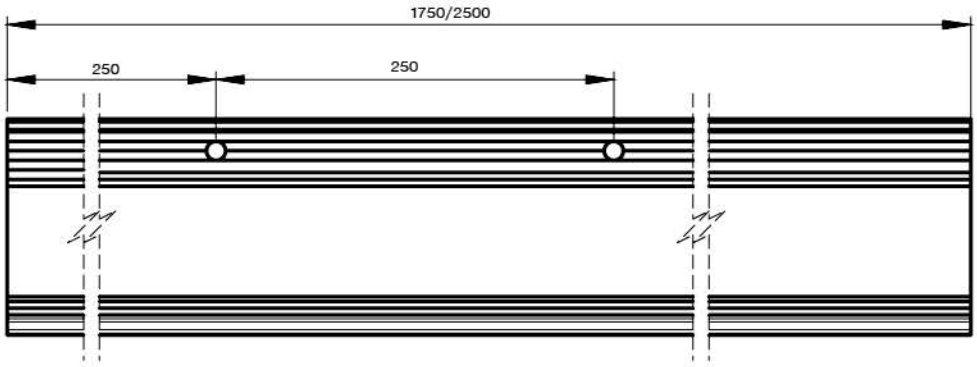

Quality	Finish	Effect	art.	glass t	G max. (kN)	
ALUMINIUM	natural	ELOX	AL/PR3-N-E-1500	16,76	2,0	✓ new
			AL/PR3-N-E-3000	17,52		new

CERTIFICATED: Glass TVG/VSG

					 AL/PR3-KIT	...
AL/PR3-N-E-1500 AL/PR3-N-E-3000	1x	1x	2x	1x	2x	...

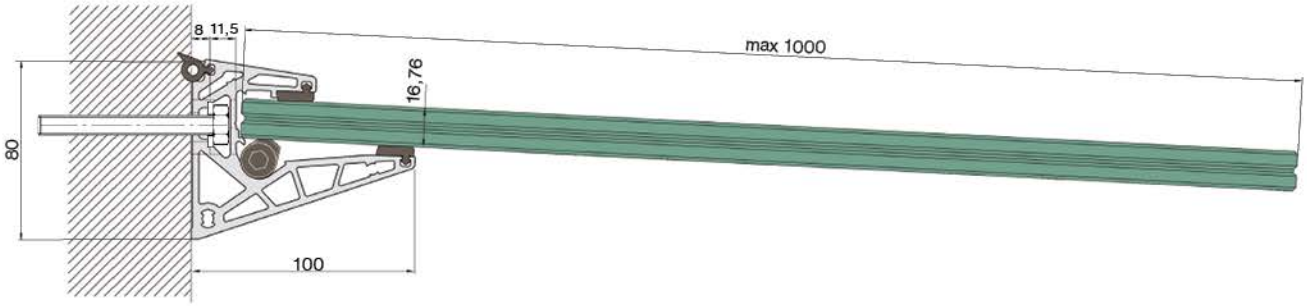

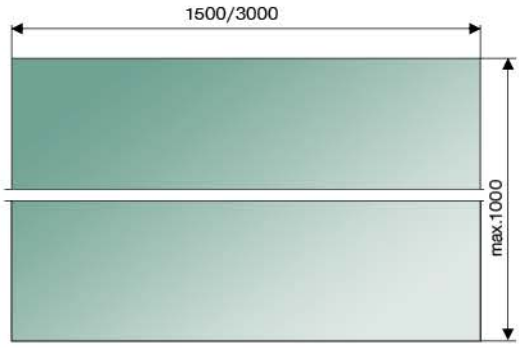

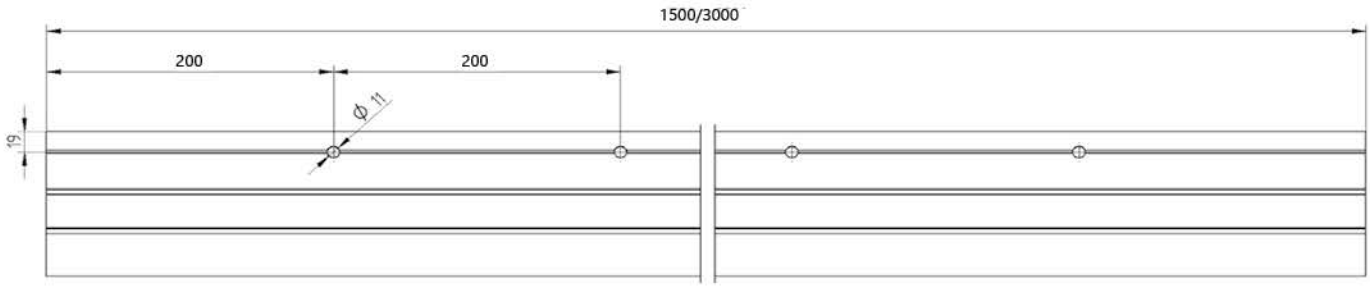

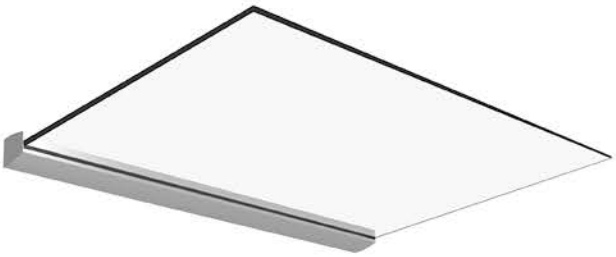

Quality	Finish	Effect	art.	glass t	G max. (kN)	LED
ALUMINIUM	natural	ELOX	x	21,52	1,5	✓

new

CERTIFICATED: Glass TVG/VSG

	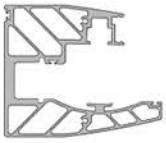						...
AL/PR4-N-E-3000	3m	3m	2x3m	7x	3m	12x	...

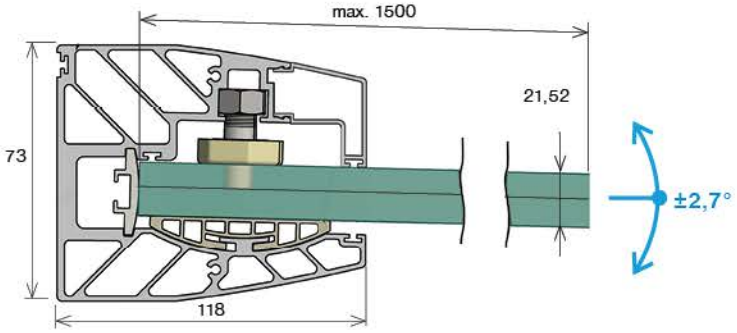

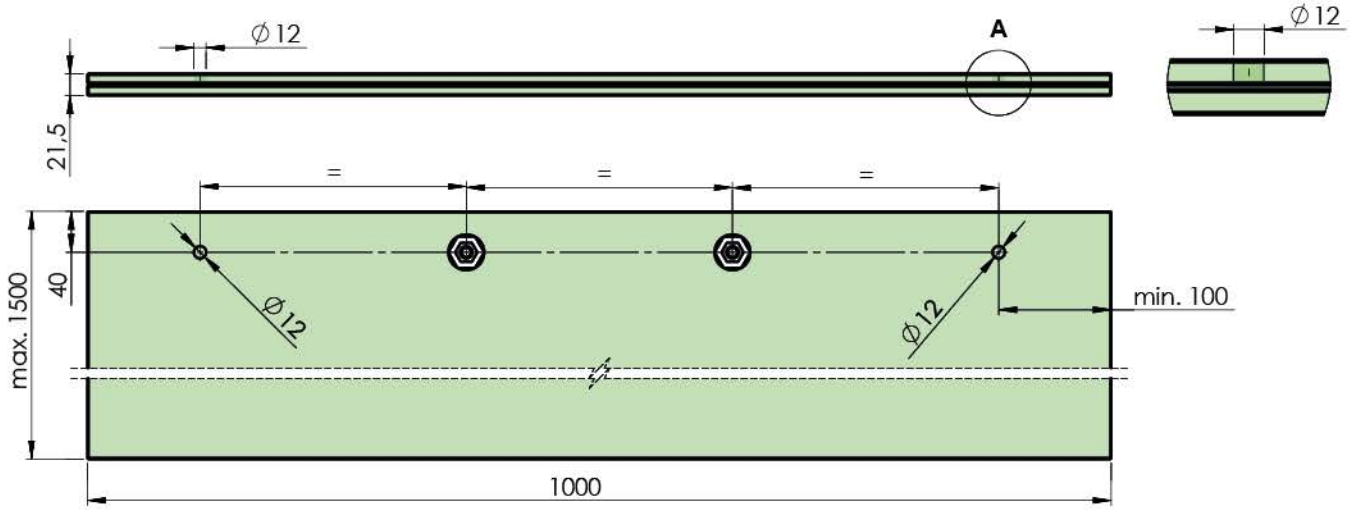

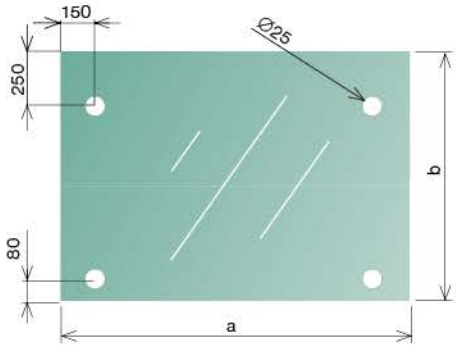

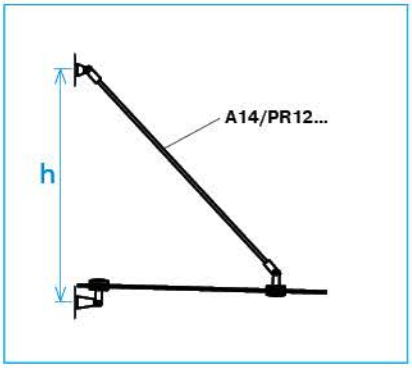

Quality	Color	art.	a	b	h	
VSG/ESG		GS/12,76-140x100-clear	1400	1000	800-930	A14/PR12-1000-M12
		GS/12,76-140x100-blue				
		GS/12,76-140x100-milk				
		GS/12,76-140x100-yellow				
		GS/12,76-180x120-clear	1800	1200	920-1080	A14/PR12-1250-M12

top

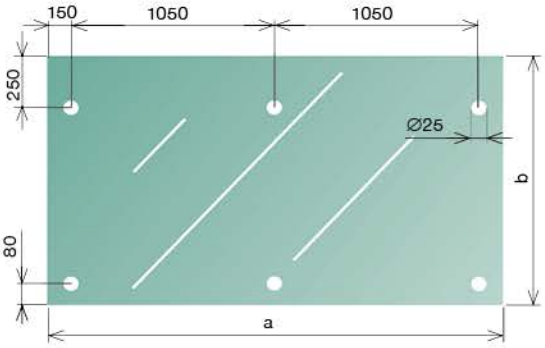

Quality	Color	art.	a	b	h	
VSG/ESG		GS/12,76-240x120-clear	2400	1200	920-1080	A14/PR12-1250-M12

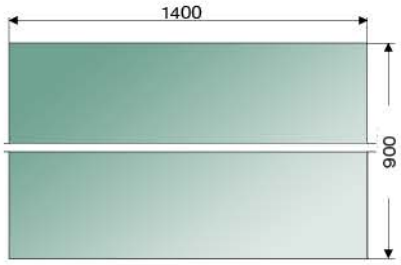

Quality	Color	art.
TVG		GS/10,76-140x90-TVG

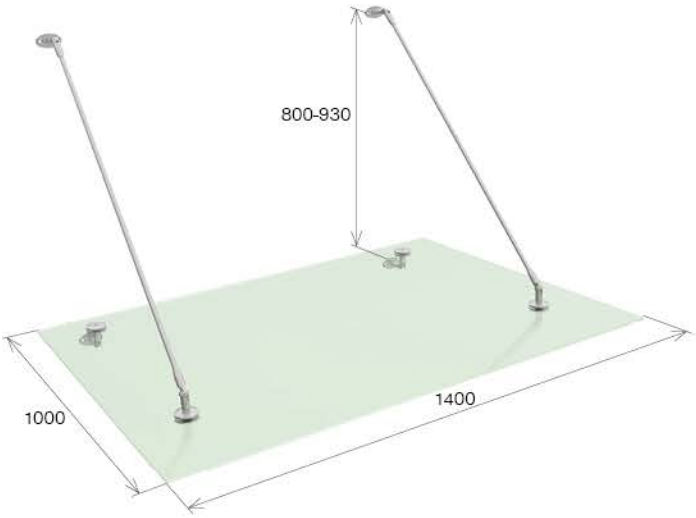

Quality	Finish	art.	A14/PR70x40-M12	A14/PR70x40-60	A14/PR-60-M12	A14/PR12-1000-M12	GS/12,76-140x100-clear
AISI316	satin	GS14/PR-R3-M12-set/glass	2x	2x	2x	2x	1x

GS14/PR-R3-M12-set

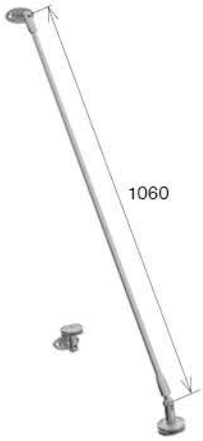

GS14/PR-R3-M12

Quality	Finish	art.	A14/PR70x40-M12	A14/PR70x40-60	A14/PR-60-M12	A14/PR12-1000-M12
AISI316	satin	GS14/PR-R3-M12-set	2x	2x	2x	2x
		GS14/PR-R3-M12	1x	1x	1x	1x

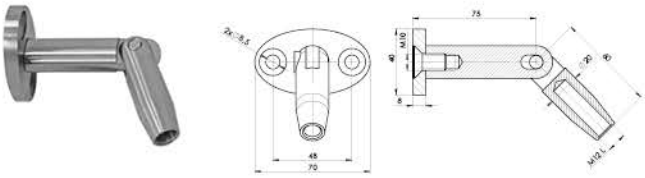

Quality	Finish	art.
AISI316	satin	A14/PR70x40-M12

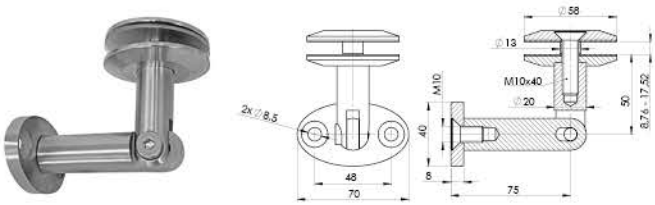

Quality	Finish	art.
AISI316	satin	A14/PR70x40-60

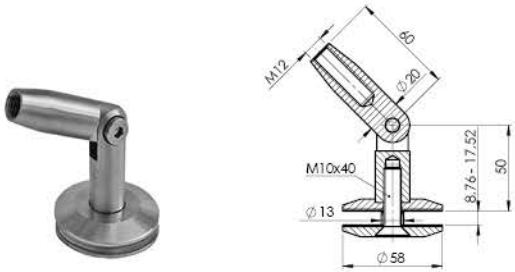

Quality	Finish	art.
AISI316	satin	A14/PR-60-M12

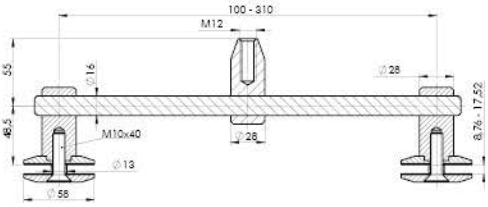

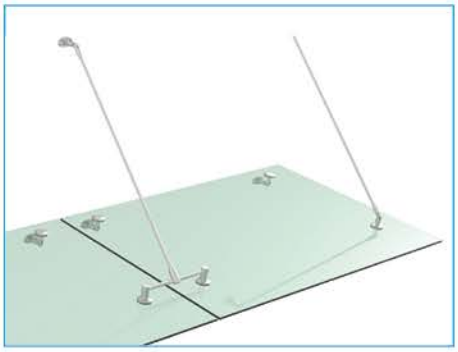

Quality	Finish	art.
AISI316	satin	A14/PR-2x60-M12

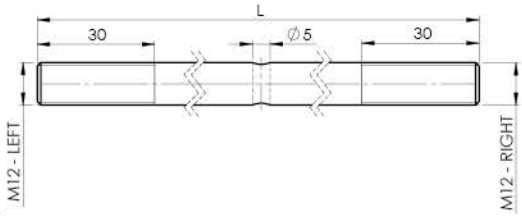

Quality	Finish	art.	L
AISI316	satin	A14/PR12-1000-M12	1000
		A14/PR12-1250-M12	1250
		A14/PR12-1500-M12	1500
		A14/PR12-2000-M12	2000

new

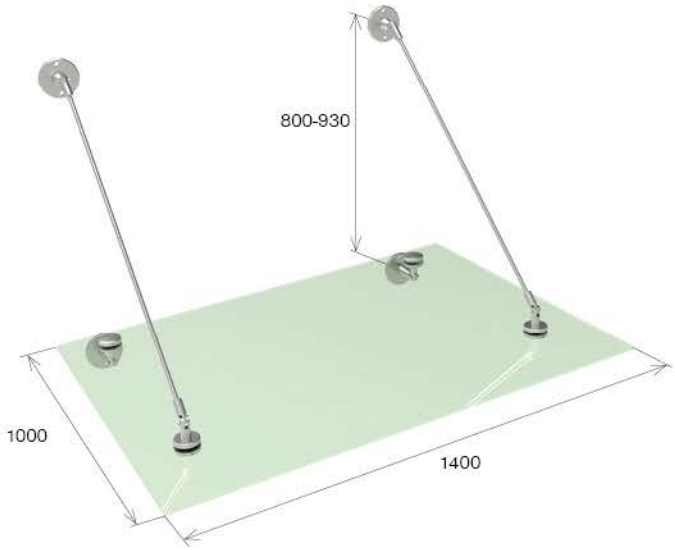

							
Quality	Finish	art.	A14/120-R	A14/120-70-R	A14/70-R	A14/PR12-1000-M12	GS/12,76-140x100-clear
AISI316	satin	GS14/PR-R-set/glass	2x	2x	2x	2x	1x

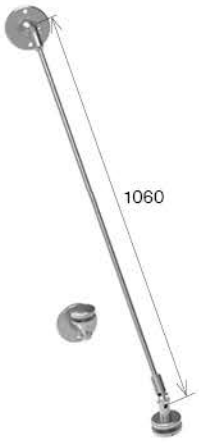

						
Quality	Finish	art.	A14/120-R	A14/120-70-R	A14/70-R	A14/PR12-1000-M12
AISI316	satin	GS14/PR-R-M12	1x	1x	1x	1x

A14/120-R A14/120-R-B

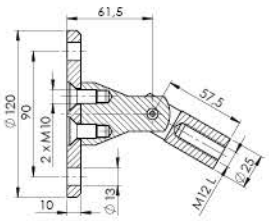

Quality	Finish	art.
AISI316	satin	A14/120-R
		A14/120-R-B

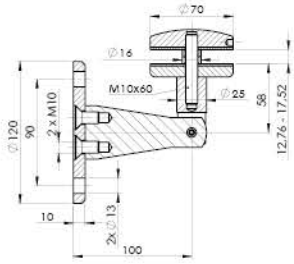

Quality	Finish	art.
AISI316	satin	A14/120-70-R

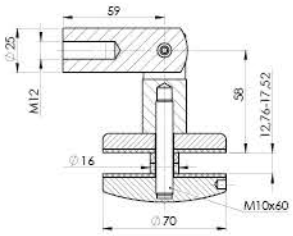

Quality	Finish	art.
AISI316	satin	A14/70-R

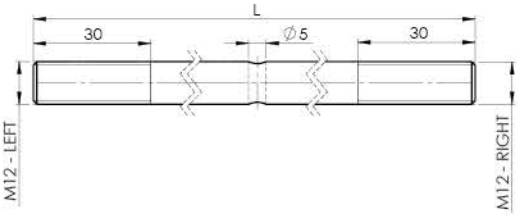

Quality	Finish	art.	L
AISI316	satin	A14/PR12-1000-M12	1000
		A14/PR12-1250-M12	1250
		A14/PR12-1500-M12	1500
		A14/PR12-2000-M12	2000

new

5.2 SPIDERS

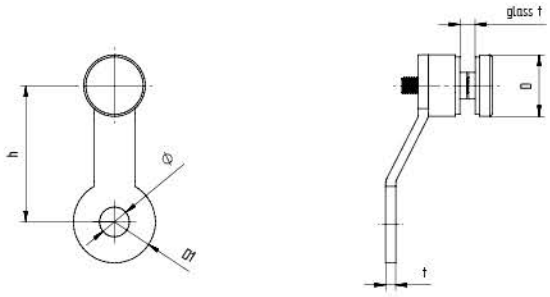

Quality	Finish	art.	h	Ø	D	D1	t	glass t
AISI304	satin	GS/ZP-101R-95	66,5	14,5	30	40	5	6-16

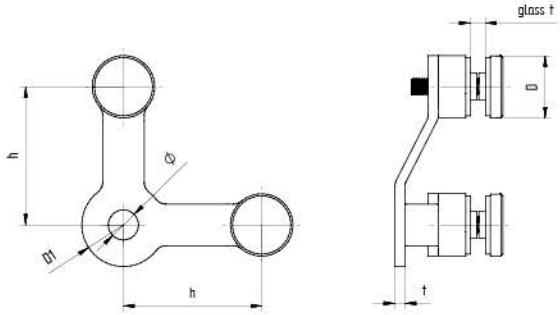

Quality	Finish	art.	h	Ø	D	D1	t	glass t
AISI304	satin	GS/ZP-102R-90-95	66,5	14,5	30	40	5	6-16

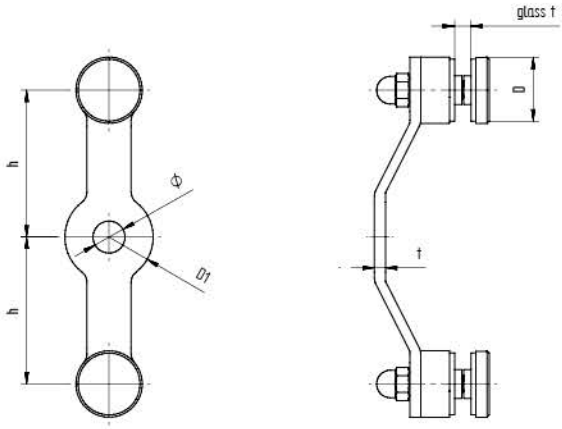

Quality	Finish	art.	h	Ø	D	D1	t	glass t
AISI304	satin	GS/ZP-102R-180-95	66,5	14,5	30	40	5	6-16

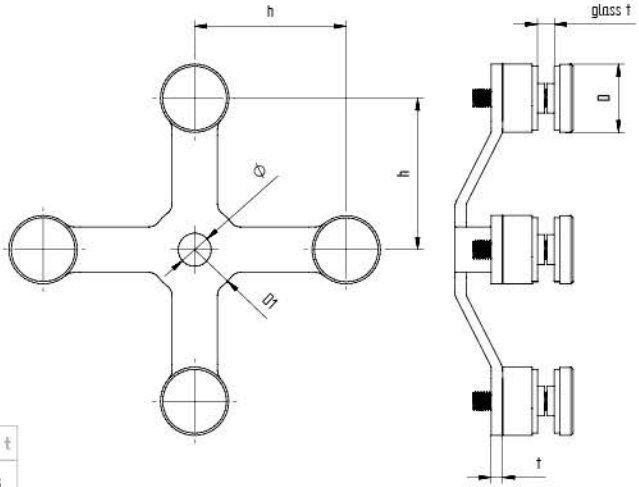

Quality	Finish	art.	h	Ø	D	D1	t	glass t
AISI304	satin	GS/ZP-104R-95	66,5	14,5	30	40	5	6-16

5.3 SLIDING DOORS
PROFILE SYSTEM

Components

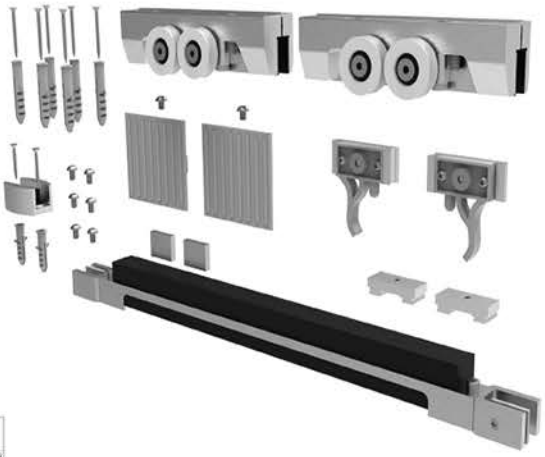

Quality	Finish	Effect	art.	glass t	glass max. (kg)	STOP
ALUMINIUM	natural	ELOX	GS/P8101-1-A-set	8-10	90	

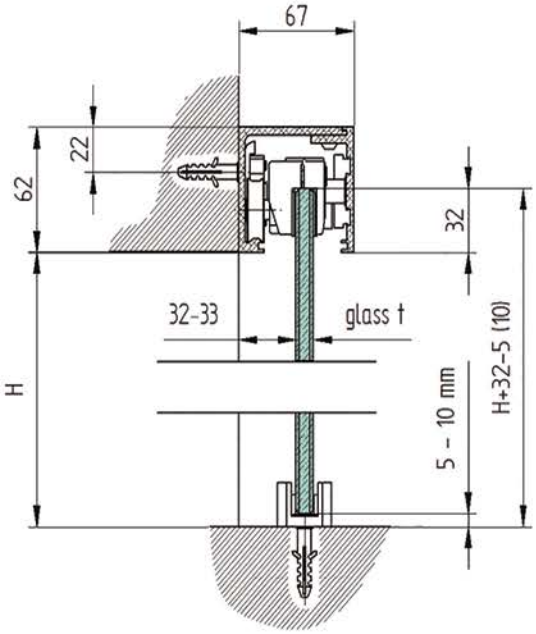

Glass preparation

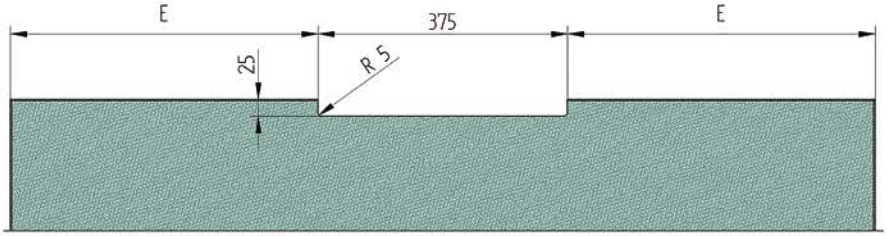

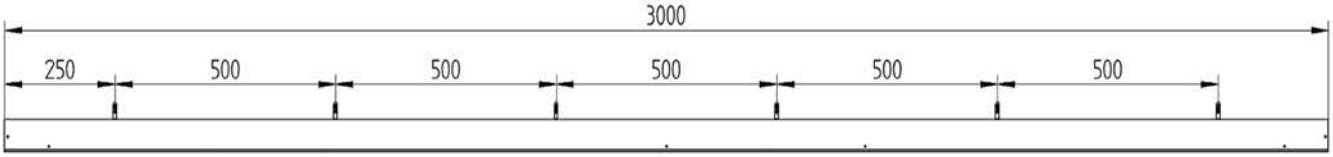

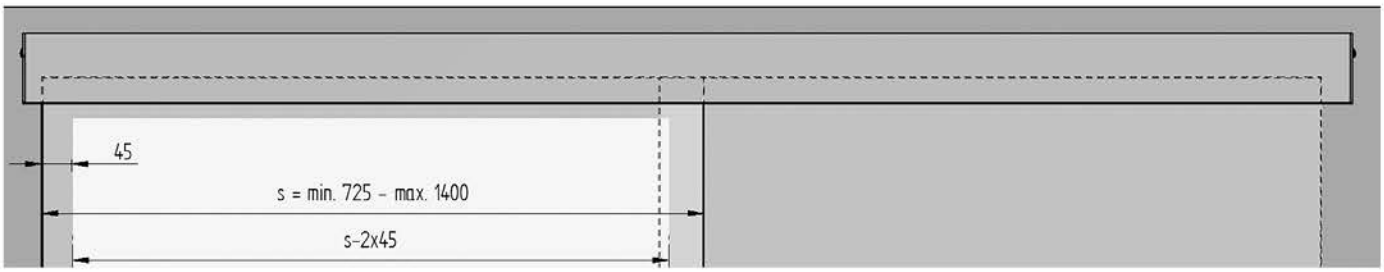

Components

Quality	Finish	Effect	art.	glass t	glass max. (kg)	STOP
ALUMINIUM	natural	ELOX	**GS-AL/P8102/N/E-set**	8-10	90	

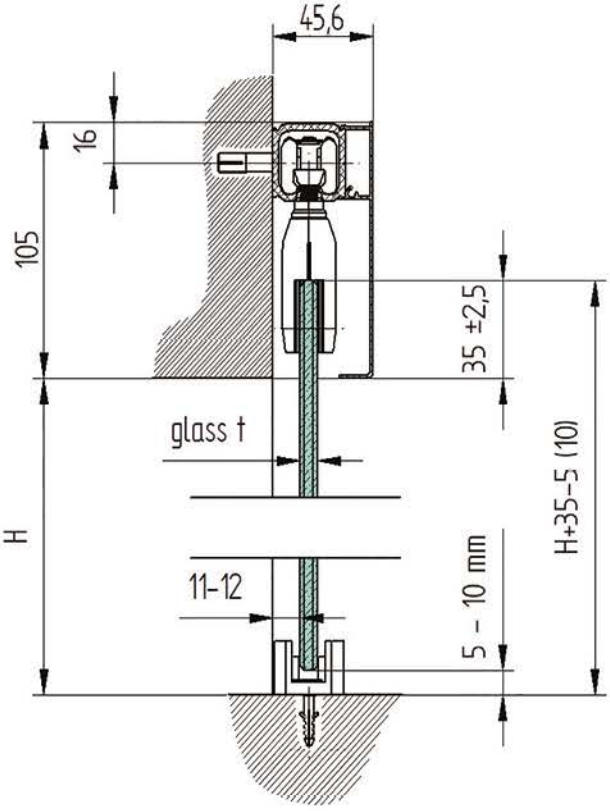

Glass preparation

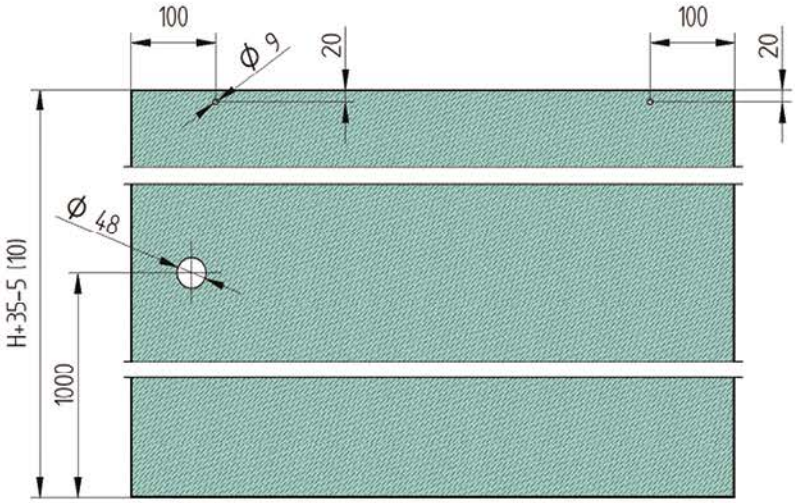

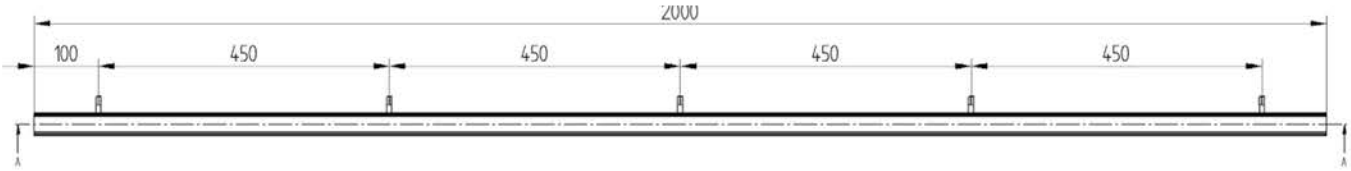

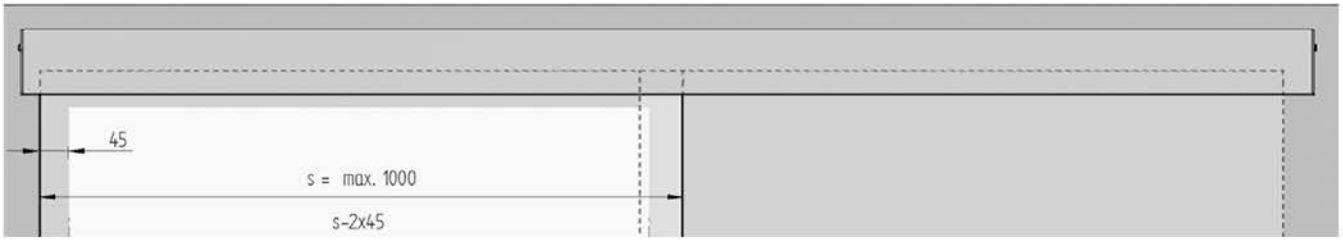

Components

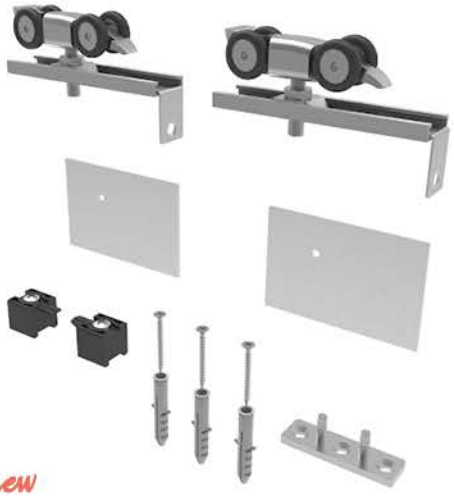

Quality	Finish	Effect	art.	wood t	wood max. (kg)	STOP
ALUMINIUM	natural	ELOX	**WS/P8102-a-set**	20-35	80	

new

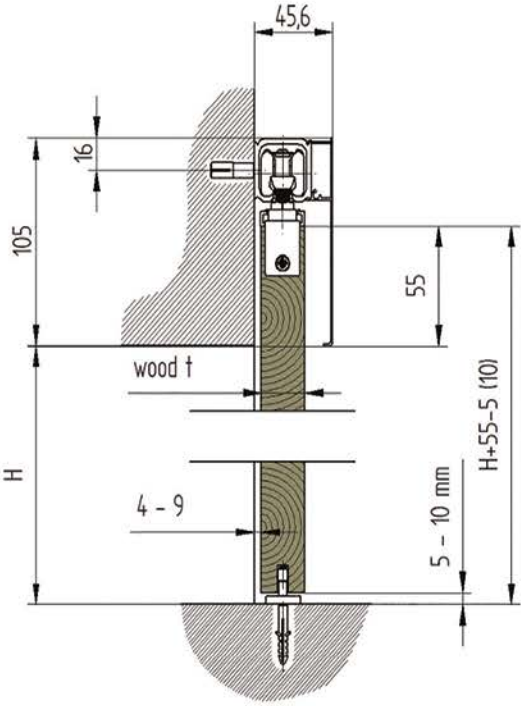

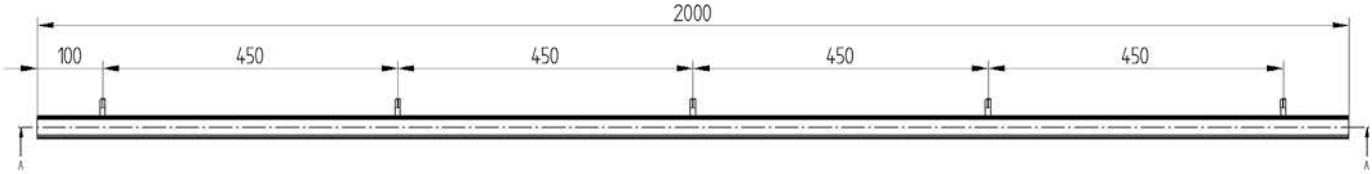

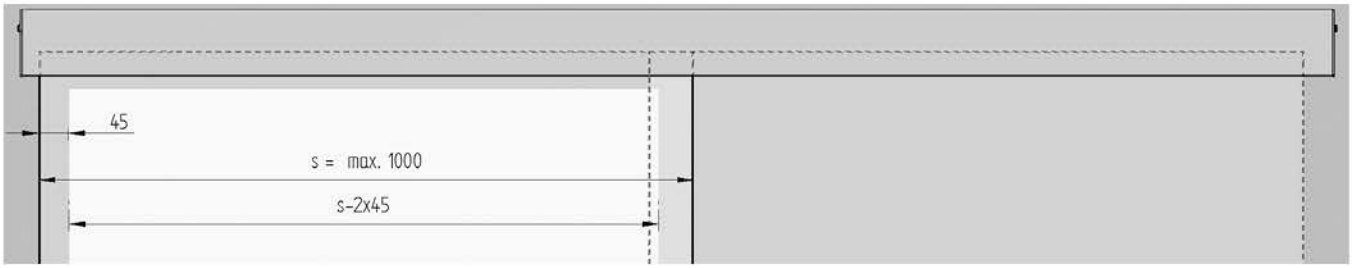

Components

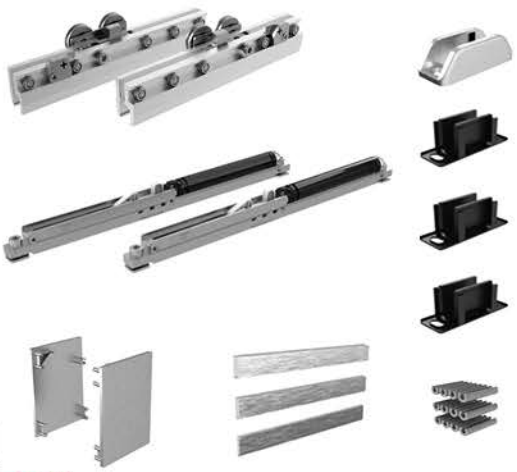

Quality	Finish	Effect	art.	glass t	glass max. (kg)	STOP
ALUMINIUM	natural	ELOX	**GS-AL/P8105/N/E-set**	8-12	80	

new

+

	Accessories		
			
art.	GS-AL/P8105	GS-AL/LN8105/N/E	GS-AL/LK8105/N/E
Quantity	1x	1x	1x

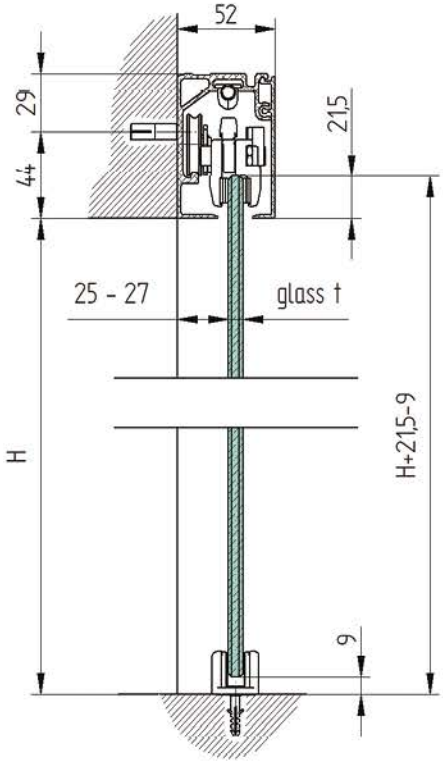

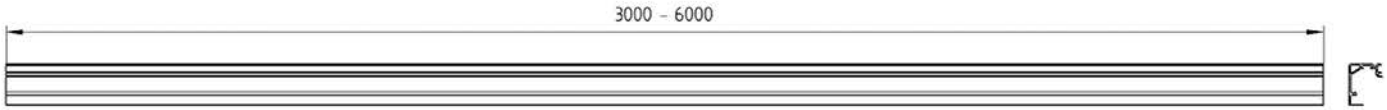

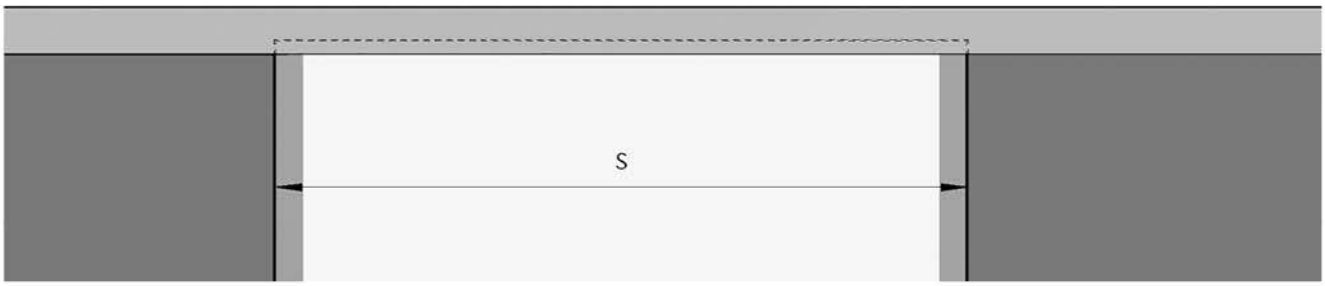

Components

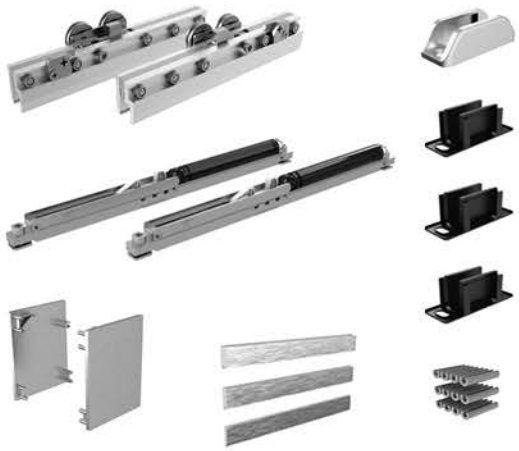

Quality	Finish	Effect	art.	glass t	glass max. (kg)	STOP
ALUMINIUM	natural	ELOX	GS-AL/P8106/N/E-set	8-12	80	

new

+

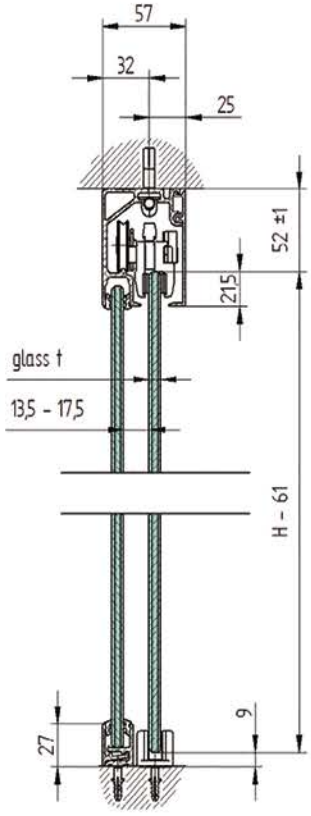

	Accessories				
					
art.	GS-AL/P8106	GS-AL/LN8106/N/E	GS-AL/LZ8106/N/E	GS-AL/ZP-21x27/N/E	GS-AL/LK8106/N/E
Quantity	1x	1x	1x	1x	1x

+

Profile	glass t			L	Quantity/ pcs
	8	10	12		
	GS-PVC/ZP-21x27-8/N/T	GS-PVC/ZP-21x27-10/N/T	GS-PVC/ZP-21x27-12/N/T	3000	2

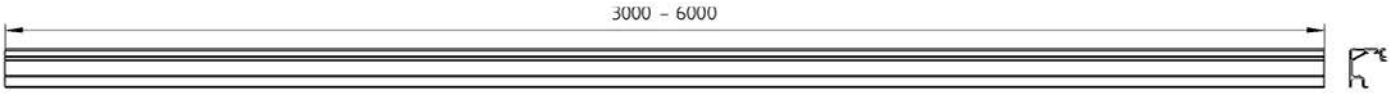

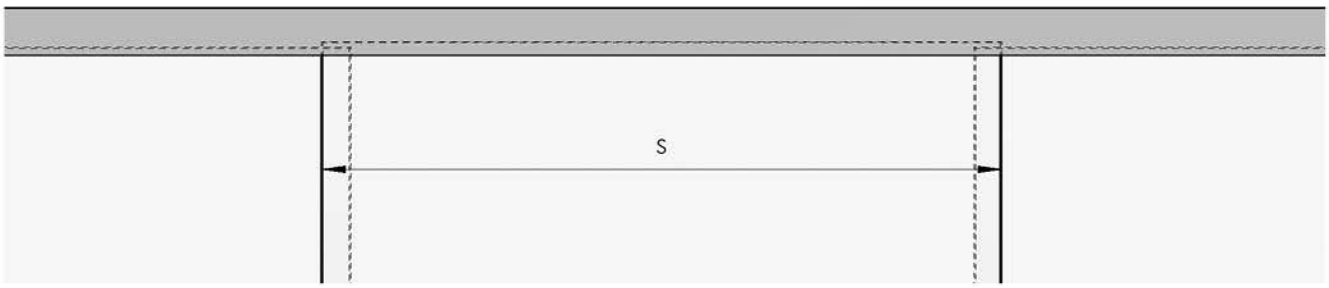

Components

Quality	Finish	Effect	art.	glass t	glass max. (kg)	STOP
ALUMINIUM	natural	ELOX	**GS-AL/P8107/N/E-set**	8-12	80	

+

	Accessories				
					
Quantity	1x	1x	2x	2x	2x

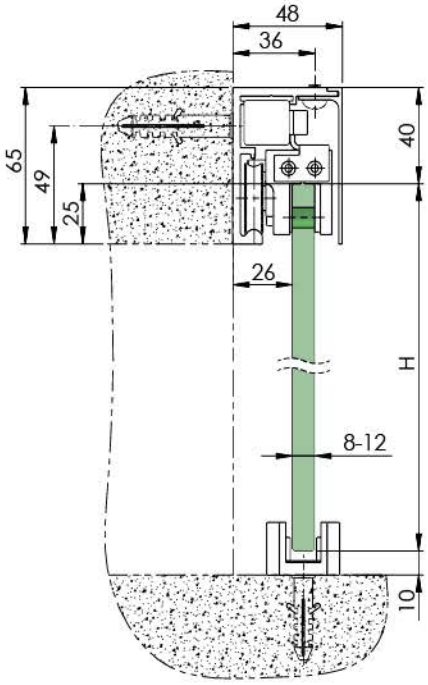

Glass preparation

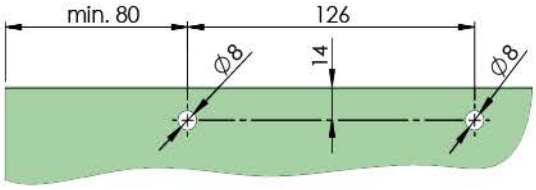

2000

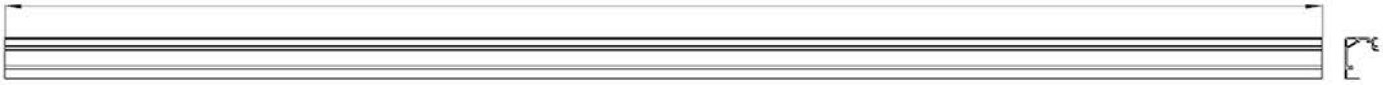

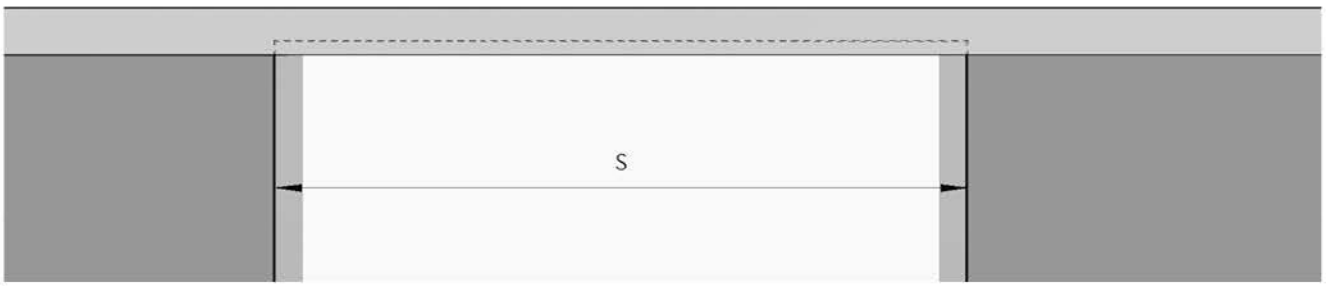

Components

Quality	Finish	Effect	art.	glass t	glass max. (kg)	STOP
ALUMINIUM	natural	ELOX	GS-AL/P8108/N/E-set	8-12	80	

new

+

Accessories							
							
Quantity	1x	1x	2x	2x	2x	1x	2x2m

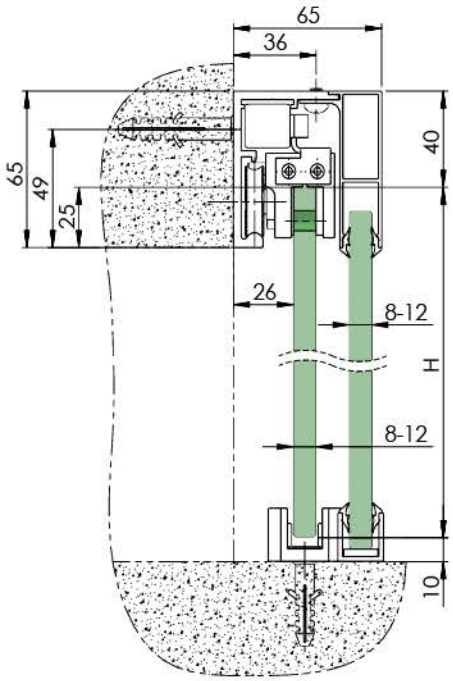

Glass preparation

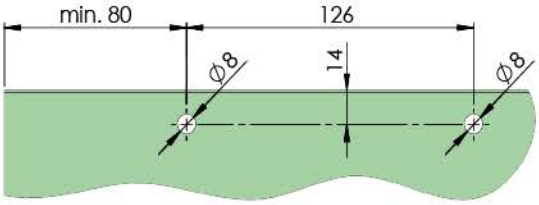

2000

SYSTEM AUTOMATIC

MOVE-TS

Remote control / Diaľkové ovládanie
3 operating moods: closed, open, automatic
3 prevádzkové režimy: zatvorené, otvorené, automatické

MOVE-HS

Motion sensor / Detekcia pohybu
In case of motion detection, automatic mode is activated
V prípade detekcie pohybu sa aktivuje automatický režim

MOVE-CS

Proximity sensor
The door is open by hand movement
Dvere sa otvoria pohybom ruky

MOVE-BT

Open button / Tlačidlo otvoriť
The door is open by pressing the button
Dvere sa otvoria stlačením tlačidla

Quality	Finish	Effect	art.	glass/panel max. (kg)	Supply voltage	Voltage (V) / (A)	Power (W)	Opening / closing	Thrust force (N)		Glass panel	
ALUMINIUM	natural	ELOX	GS-AL/ZP-46x50-N-E-MOVE	80	90-230 VAC 50-60 Hz	24 / 5	120	EN 16005	75	-	800	new
			GS-AL/ZP-65x70-N-E-MOVE-1							✓	800	new
			GS-AL/ZP-65x70-N-E-MOVE-2							✓	1000	new
			GS-AL/ZP-65x70-N-E-MOVE-3							✓	1300	new

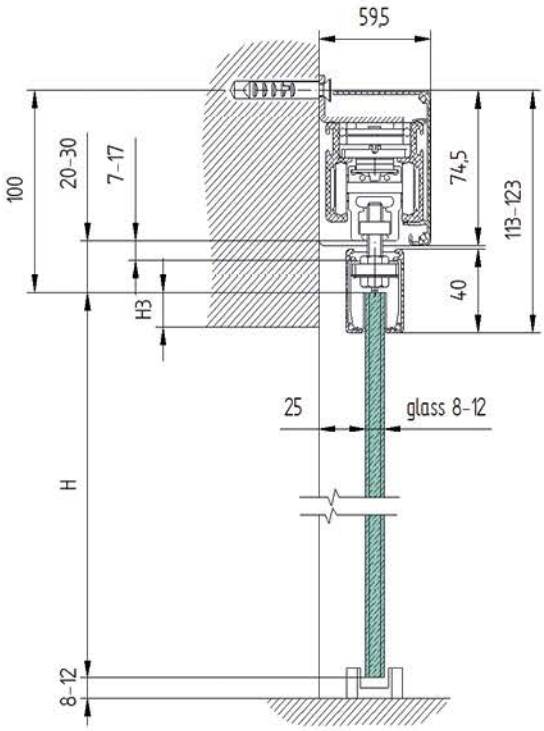

A

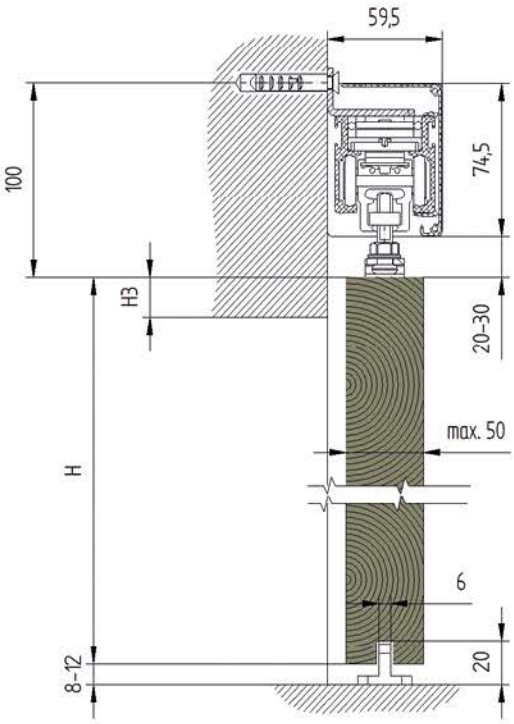

B

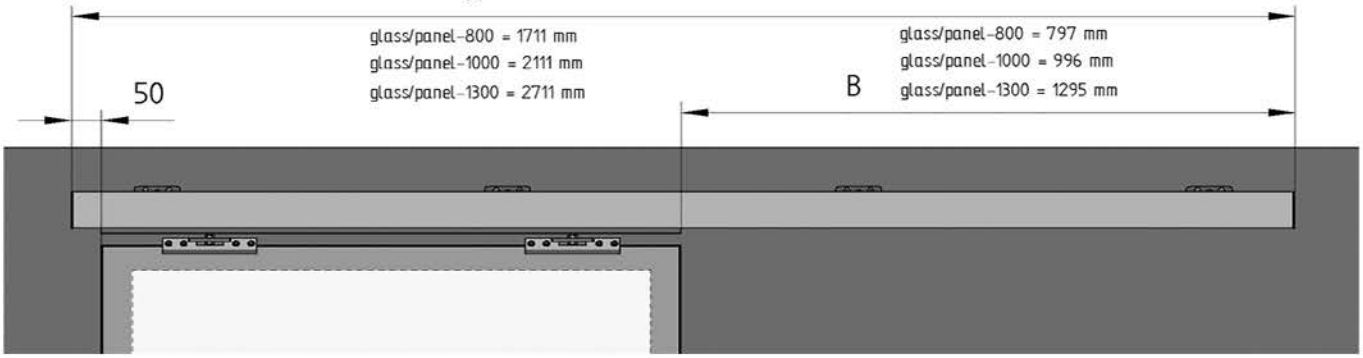

5.3 SLIDING DOORS

BAR SYSTEM

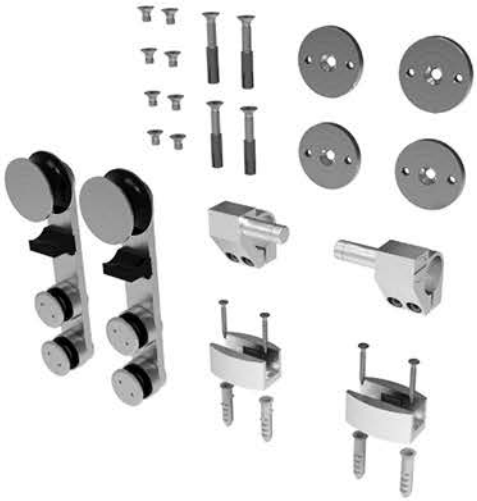

Quality	Finish	art.	glass t	glass max. (kg)	STOP
AISI304	satin	GS-304/P9101/S-set	8-12	120	

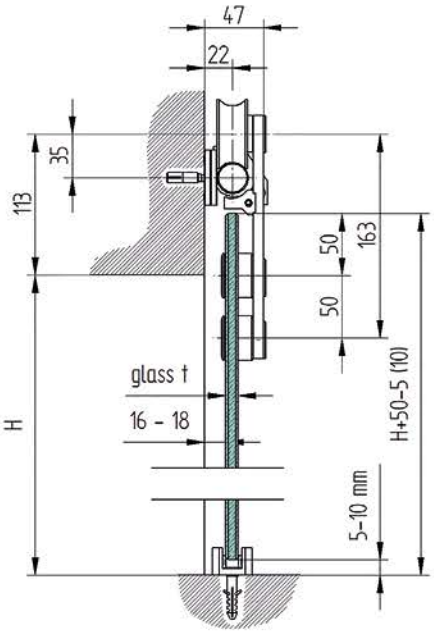

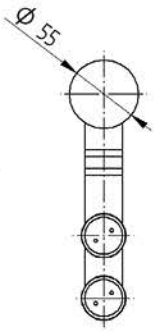

Glass preparation

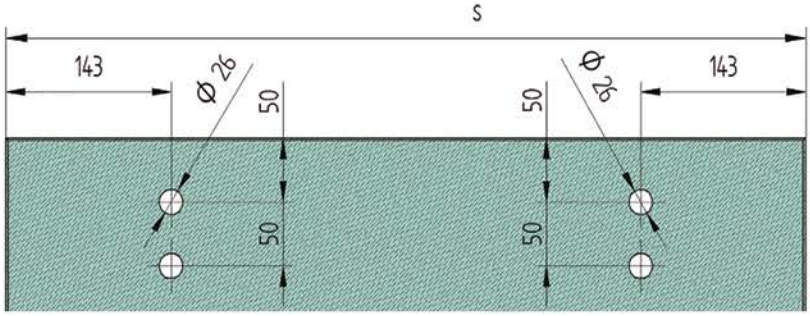

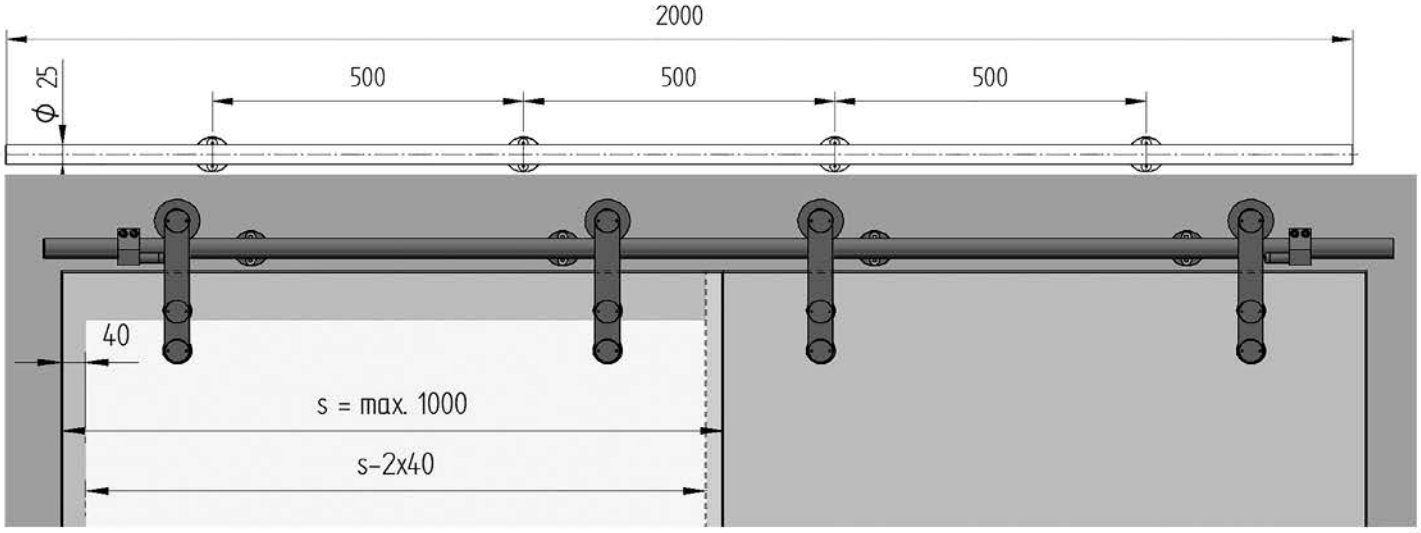

Components

Quality	Finish	art.	glass t	glass max. (kg)	STOP
AISI304	satin	GS-304/P9102/S-set	8-12	120	

new

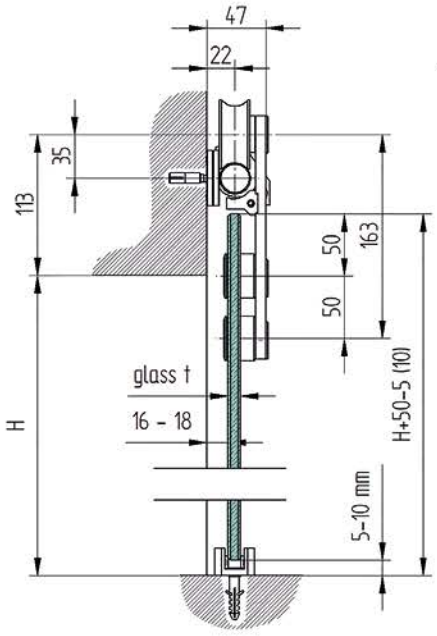

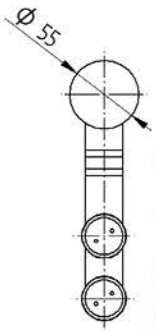

Glass preparation

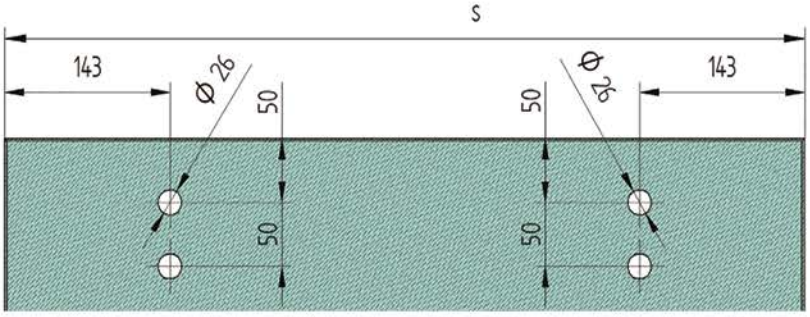

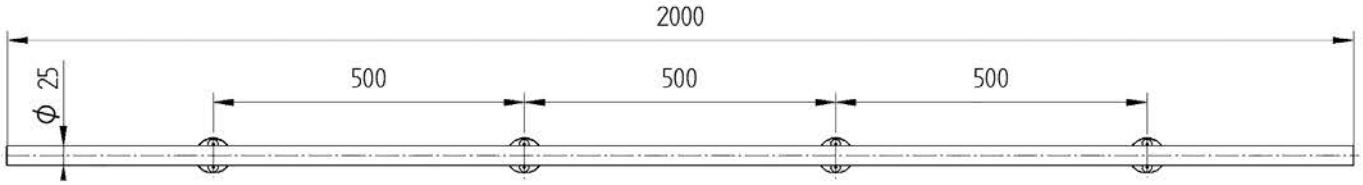

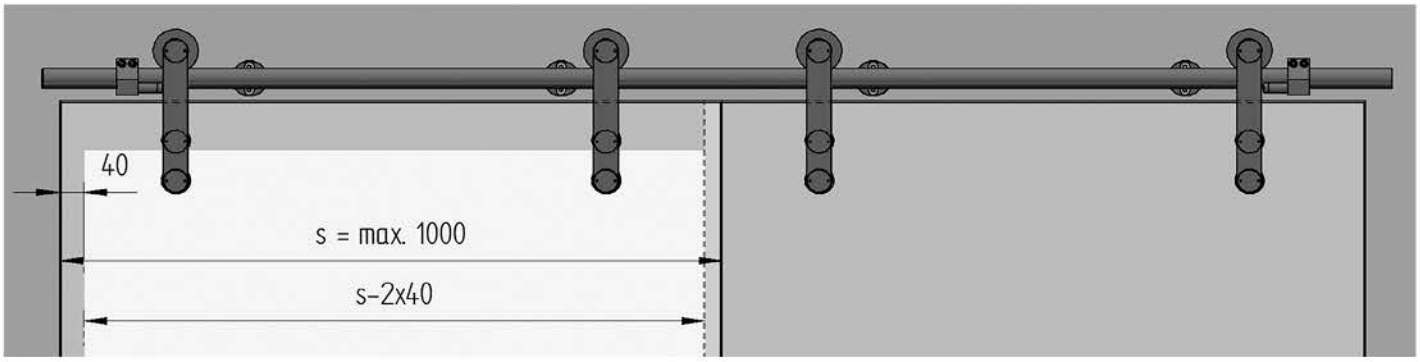

Components

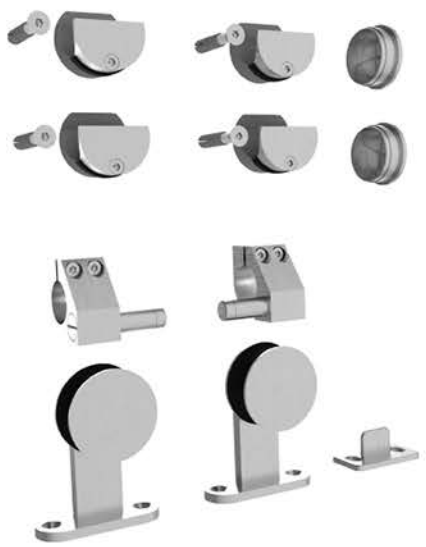

Quality	Finish	art.	wood t	glass max. (kg)	STOP
AISI304	satin	WS/P9101/S-set	30-40	90	

new

wood

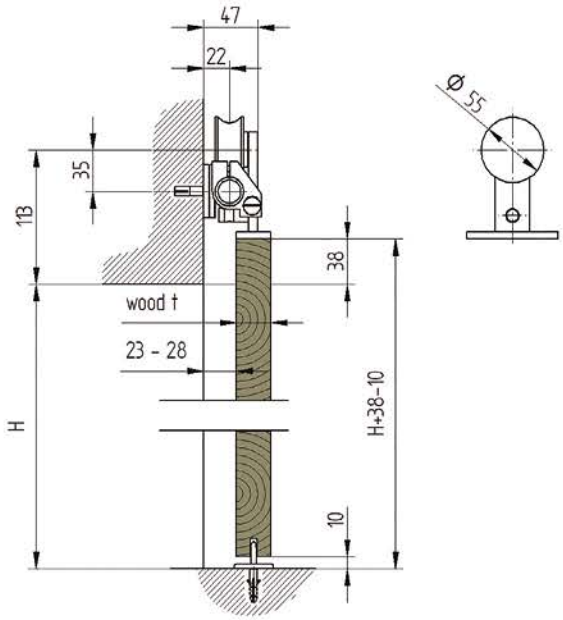

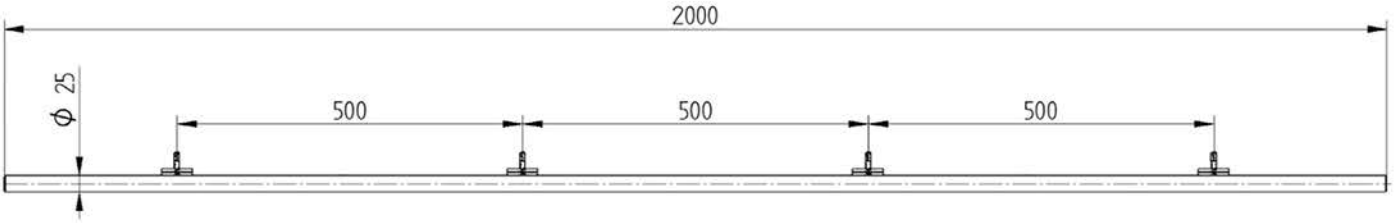

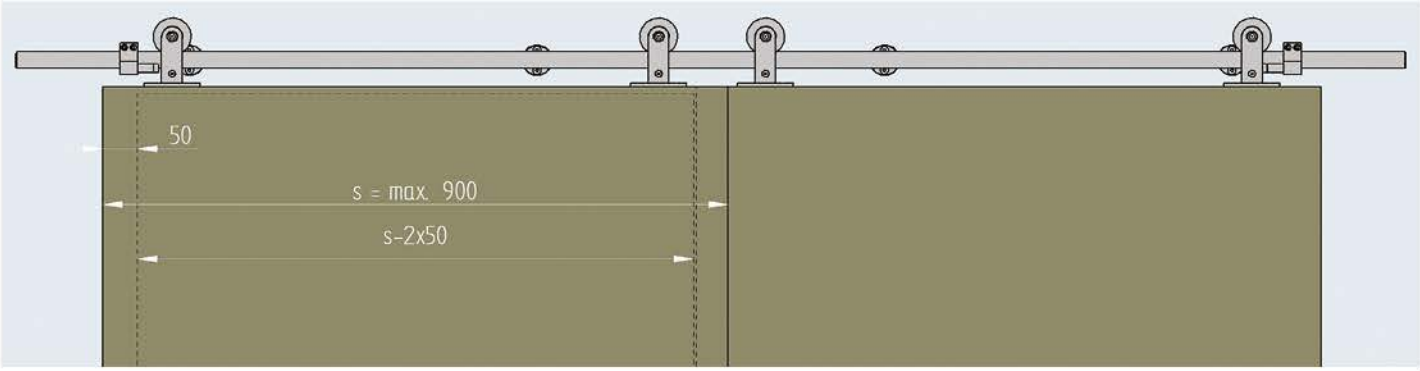

Components

Quality	Finish	art.	glass t	glass max. (kg)	STOP
AISI304	satin	GS-AL/P9201/N/E-set	8-10	90	

Glass preparation

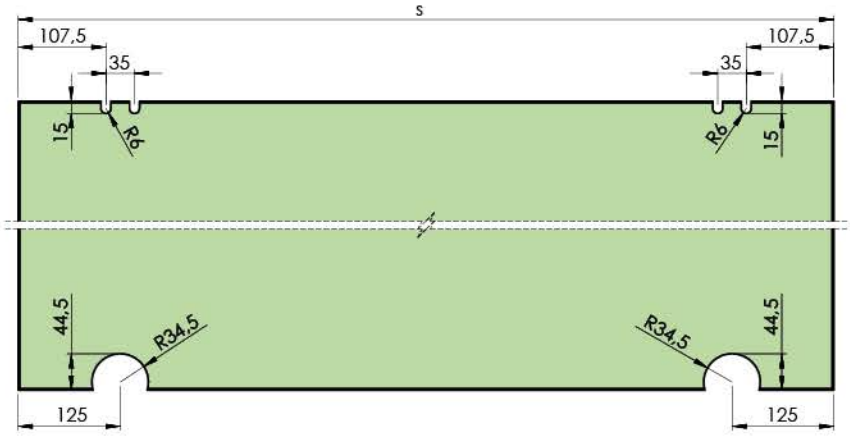

Quality	Finish	art.
AISI304	satin	GS/P9100-set

new

Quality	Finish	art.	L	D	stop	compatibility
AISI304	satin	GS/P8000	2000	25		GS/P9100A1A
		A/25x2-2000				WS/P9100-1-i

new

new

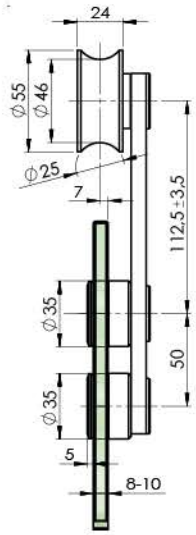

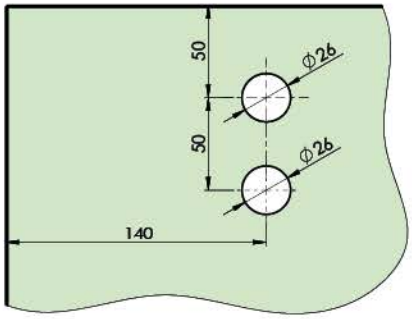

Quality	Finish	art.	glass t	glass max. (kg)
AISI304	satin	GS/P9100A1A	8-12	60

new

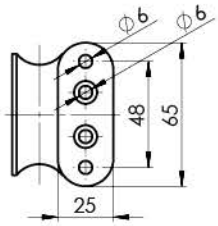

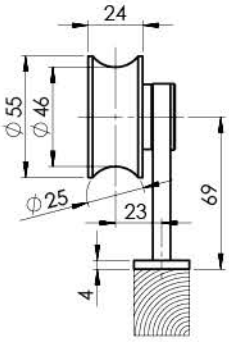

Quality	Finish	art.	wood max. (kg)
AISI304	satin	WS/P9100-1-i	60

wood

5.4 SHOWER CABINS

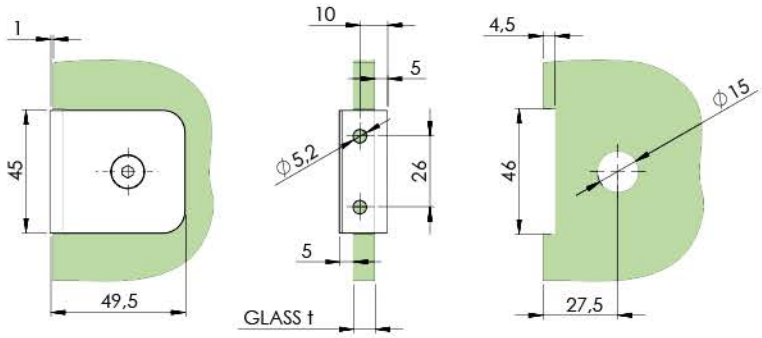

Quality	Finish	art.	glass t	b x h	mounting
AISI304	satin	GS-304/ZP-901/S	8-10	45x45	wall/ glass

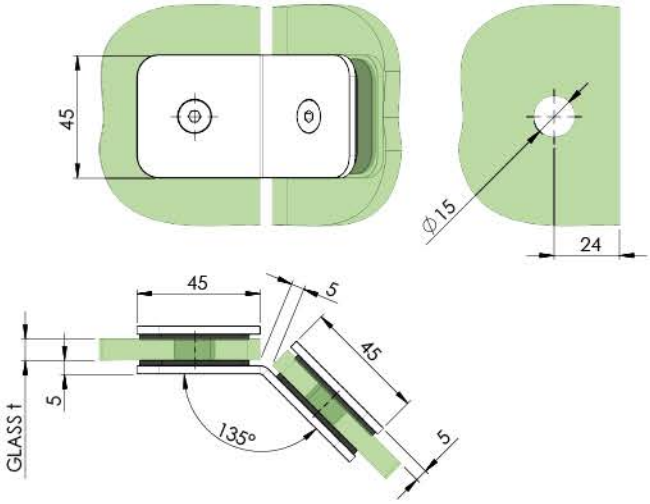

Quality	Finish	art.	glass t	b x h	mounting
AISI304	satin	GS-304/ZP-904/S	8-10	45x45	glass/ glass

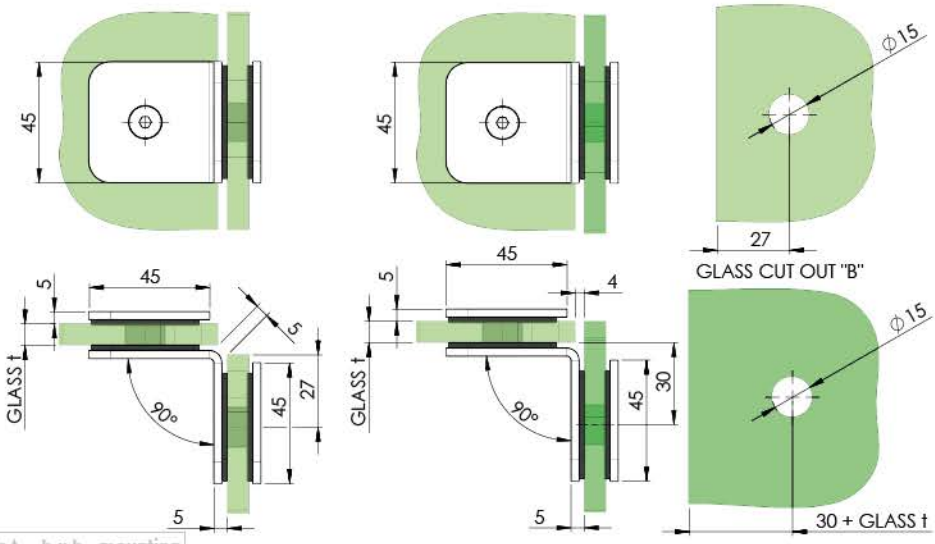

Quality	Finish	art.	glass t	b x h	mounting
AISI304	satin	GS-304/ZP-906/S	8-10	45x45	glass/ glass

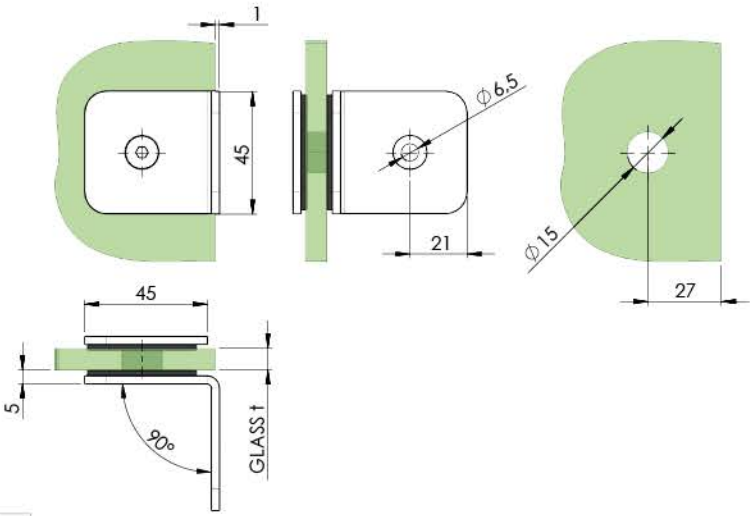

Quality	Finish	art.	glass t	b x h	mounting
AISI304	satin	GS-304/ZP-907/S	8-10	45x45	wall/ glass

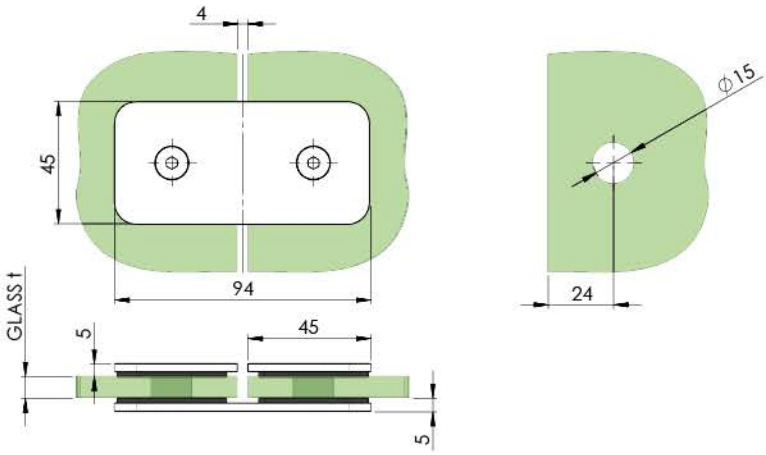

Quality	Finish	art.	glass t	b x h	mounting
AISI304	satin	GS-304/ZP-917/S	8-10	45x45	glass/ glass

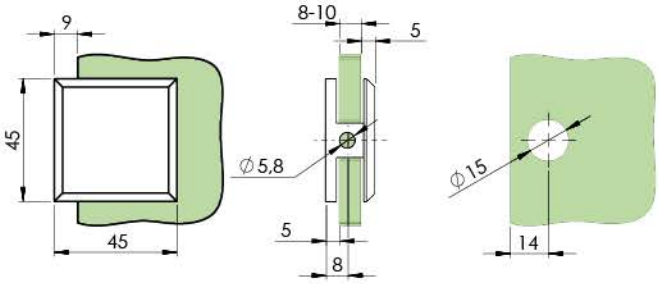

Quality	Finish	art.	glass t	b x h	mounting
ZAMAK	satin	GS-ZN/ZP-901/S	8-10	45x45	wall/ glass
	polish	GS-ZN/ZP-901/P/Cr			

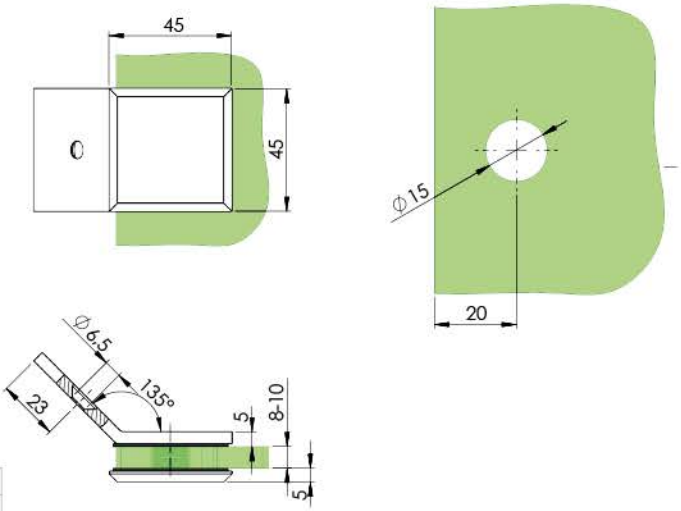

Quality	Finish	art.	glass t	b x h	mounting
ZAMAK	satin	GS-ZN/ZP-903/S	8-10	45x45	wall/ glass
	polish	GS-ZN/ZP-903/P/Cr			

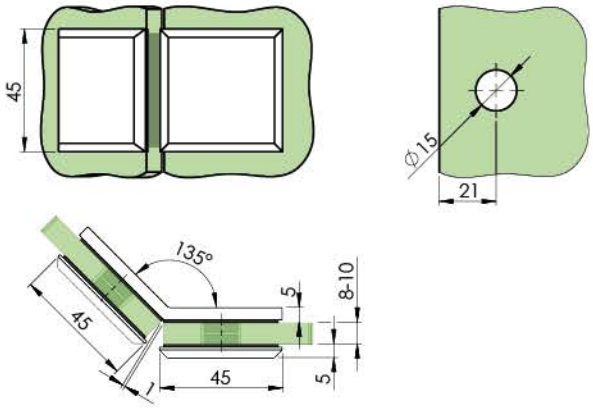

Quality	Finish	art.	glass t	b x h	mounting
ZAMAK	satin	GS-ZN/ZP-904/S	8-10	45x45	glass/ glass
	polish	GS-ZN/ZP-904/P/Cr			

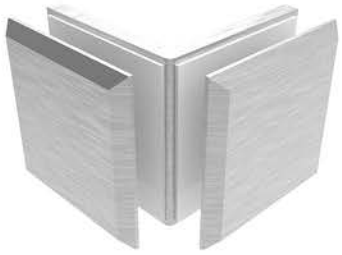

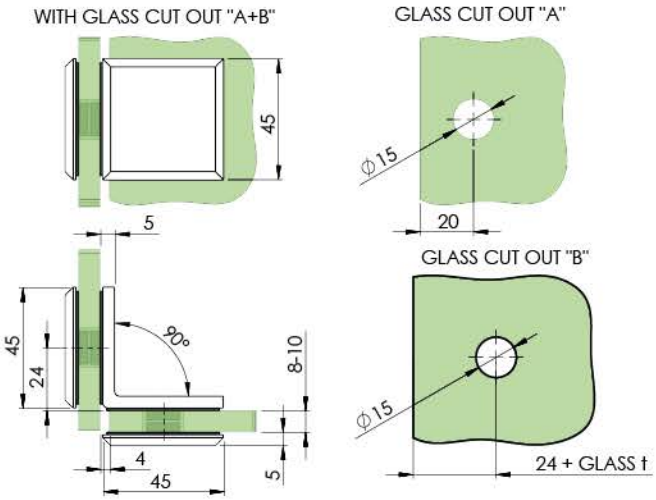

Quality	Finish	art.	glass t	b x h	mounting
ZAMAK	satin	GS-ZN/ZP-906/S	8-10	45x45	glass/ glass
	polish	GS-ZN/ZP-906/P/Cr			

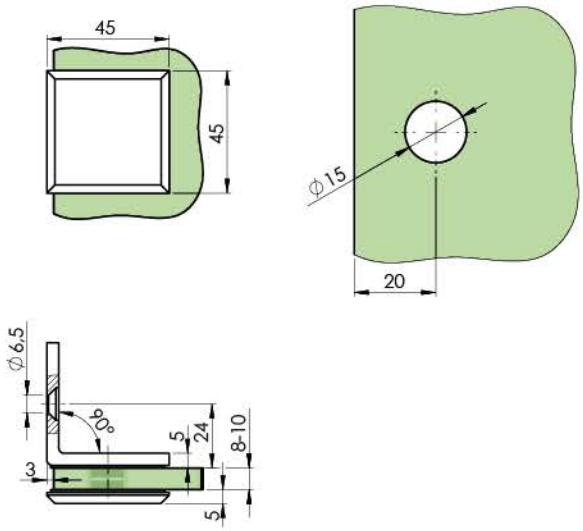

Quality	Finish	art.	glass t	b x h	mounting
ZAMAK	satin	GS-ZN/ZP-907/S	8-10	45x45	wall/ glass
	polish	GS-ZN/ZP-907/P/Cr			

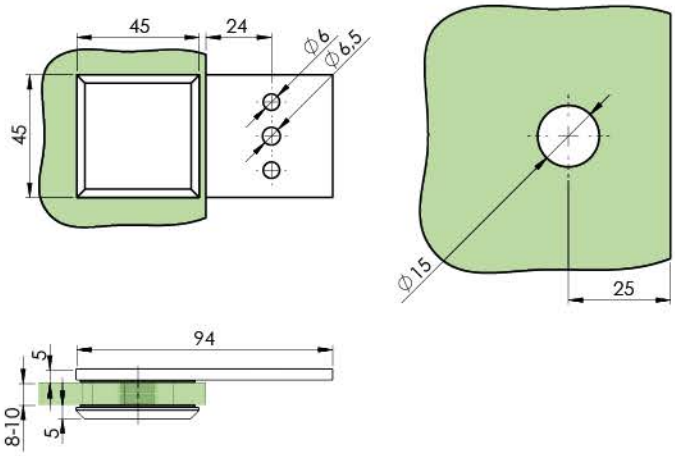

Quality	Finish	art.	glass t	b x h	mounting
ZAMAK	satin	GS-ZN/ZP-909/S	8-10	45x45	wall/ glass
	polish	GS-ZN/ZP-909/P/Cr			

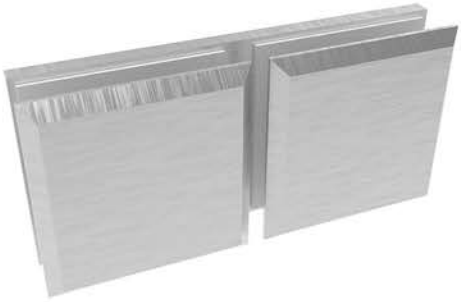

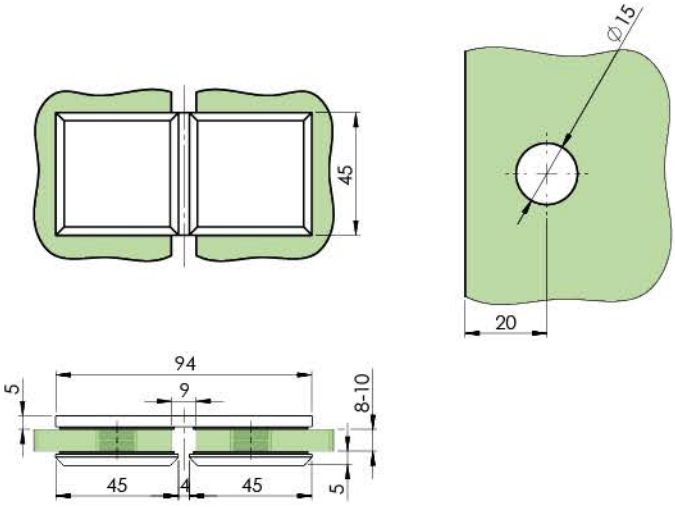

Quality	Finish	art.	glass t	b x h	mounting
ZAMAK	satin	GS-ZN/ZP-917/S	8-10	45x45	glass/ glass
	polish	GS-ZN/ZP-917/P/Cr			

Quality	Finish	art.	L	
AISI304	polish	A/30x10x1,5-2000-L	2000	new
		A/30x10x1,5-6000-L	6000	new

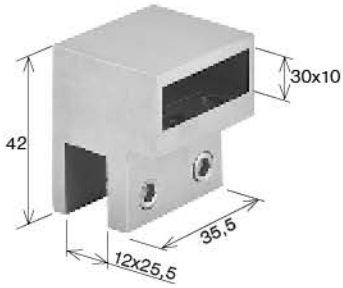

Quality	Finish	art.	
AISI304	polish	GS-304/ZP-220/P/Cr	new

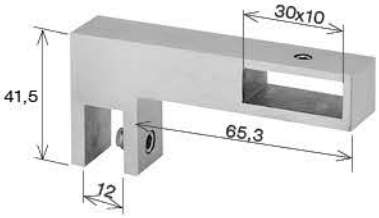

Quality	Finish	art.	
AISI304	polish	GS-304/ZP-221/P/Cr	new

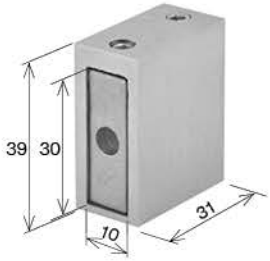

Quality	Finish	art.	
AISI304	polish	GS-304/ZP-222/P/Cr	new

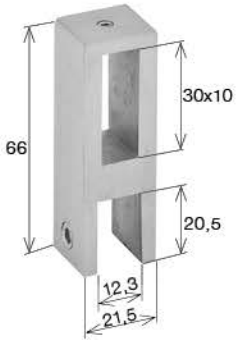

Quality	Finish	art.	
AISI304	polish	GS-304/ZP-223/P/Cr	new

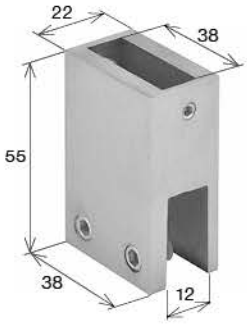

Quality	Finish	art.	
AISI304	polish	GS-304/ZP-224/P/Cr	new

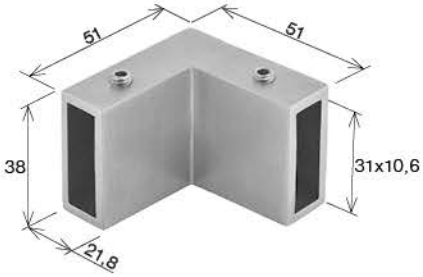

Quality	Finish	art.	
AISI304	polish	GS-304/ZP-225/P/Cr	new

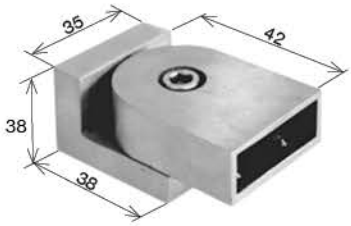

Quality	Finish	art.	
AISI304	polish	GS-304/ZP-226/P/Cr	new

5.5 SWING DOORS

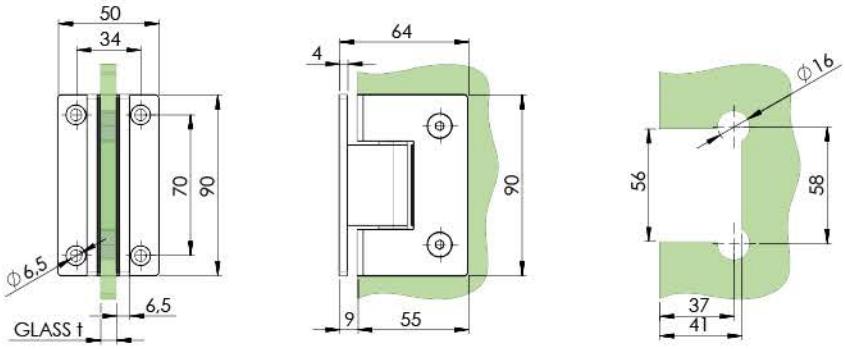

Quality	Finish	art.	glass t	Gmax (kg)/2pcs	STOP	door width	
AISI304	satin	GS-304/D-B-990-1/S-B	6-10	45	±90°, 0°	950	±15°
	polish	GS-304/D-B-990-1/P/Cr-B					

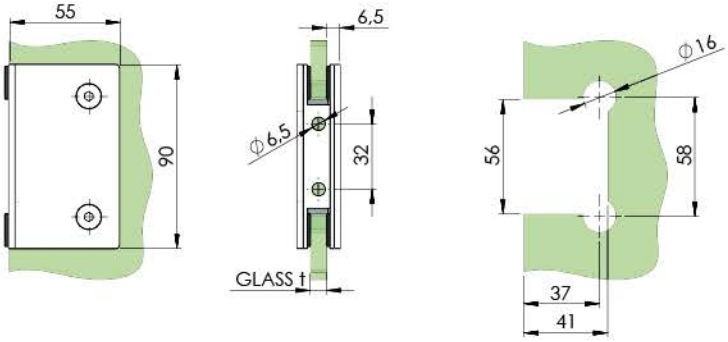

Quality	Finish	art.	glass t	Gmax (kg)/2pcs	STOP	door width	
AISI304	satin	GS-304/D-B-990-5/S-B	6-10	45	±90°, 0°	950	±15°
	polish	GS-304/D-B-990-5/P/Cr-B					

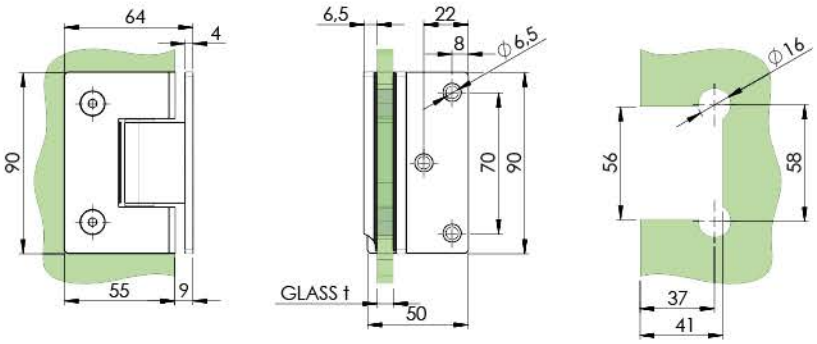

Quality	Finish	art.	glass t	Gmax (kg)/2pcs	STOP	door width	
AISI304	satin	GS-304/D-B-990-6/S-B	6-10	45	±90°, 0°	950	±15°
	polish	GS-304/D-B-990-6/P/Cr-B					

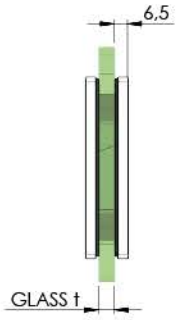

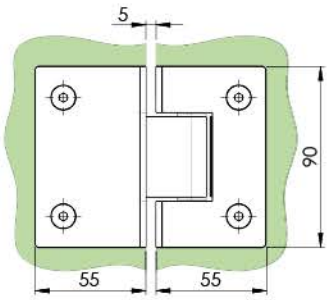

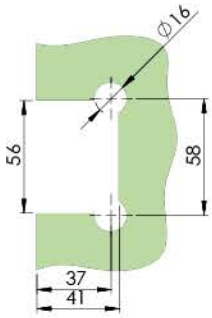

Quality	Finish	art.	glass t	Gmax (kg)/2pcs	STOP	door width	
AISI304	satin	GS-304/D-B-990-2/S-B	6-10	45	±90°, 0°	950	±15°
	polish	GS-304/D-B-990-2/P/Cr-B					

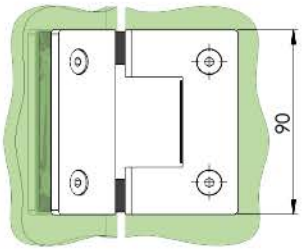

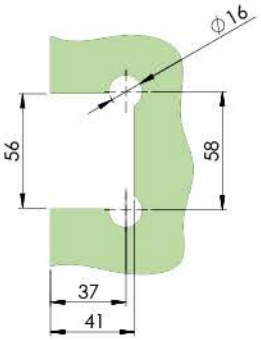

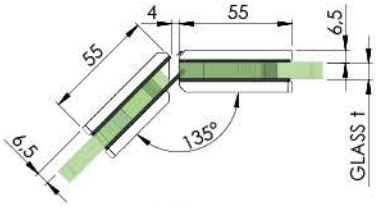

Quality	Finish	art.	glass t	Gmax (kg)/2pcs	STOP	door width	
AISI304	satin	GS-304/D-B-990-3/S-B	6-10	45	±90°, 0°	950	±15°
	polish	GS-304/D-B-990-3/P/Cr-B					

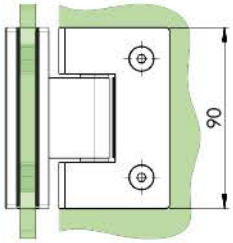

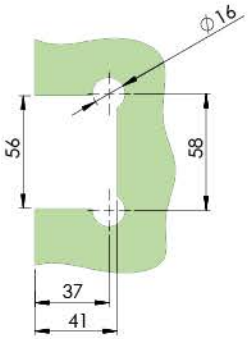

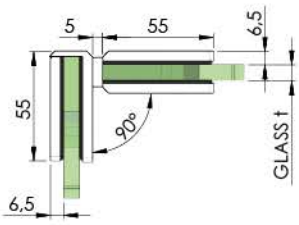

Quality	Finish	art.	glass t	Gmax (kg)/2pcs	STOP	door width	
AISI304	satin	GS-304/D-B-990-4/S-B	6-10	45	±90°, 0°	950	±15°
	polish	GS-304/D-B-990-4/P/Cr-B					

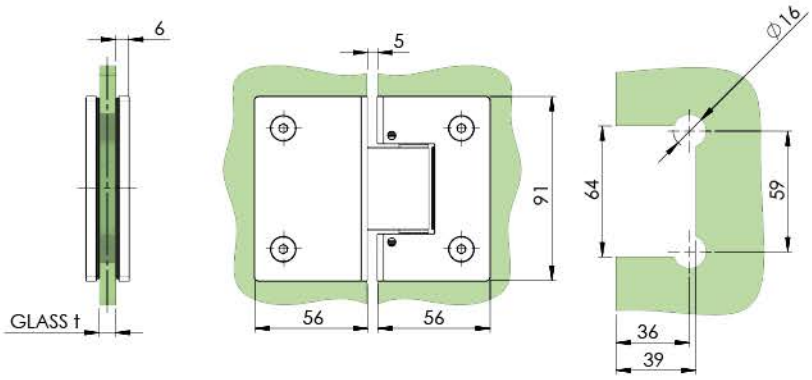

Quality	Finish	art.	glass t	Gmax (kg)/2pcs	STOP	door width	zero angle	
Brass	satin	GS-MS/D-B-980-2/S-B	6-10	45	±90°, 0°	950	±20°	±15°
	polish	GS-MS/D-B-980-2/P/Cr-B						

new
new

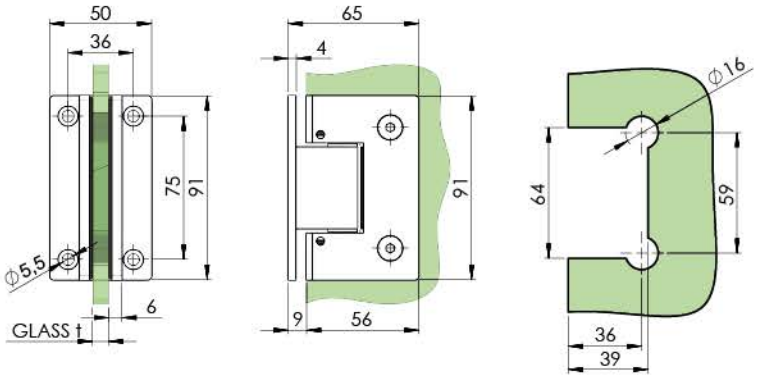

Quality	Finish	art.	glass t	Gmax (kg)/2pcs	STOP	door width	zero angle	
Brass	satin	GS-MS/D-B-980-1/S-B	6-10	45	±90°, 0°	950	±20°	±15°
	polish	GS-MS/D-B-980-1/P/Cr-B						

new
new

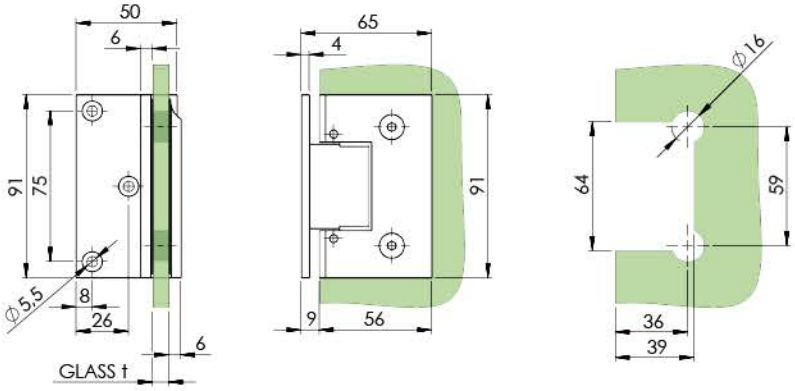

Quality	Finish	art.	glass t	Gmax (kg)/2pcs	STOP	door width	zero angle	
Brass	satin	GS-MS/D-B-980-6/S-B	6-10	45	±90°, 0°	950	±20°	±15°
	polish	GS-MS/D-B-980-6/P/Cr-B						

new
new

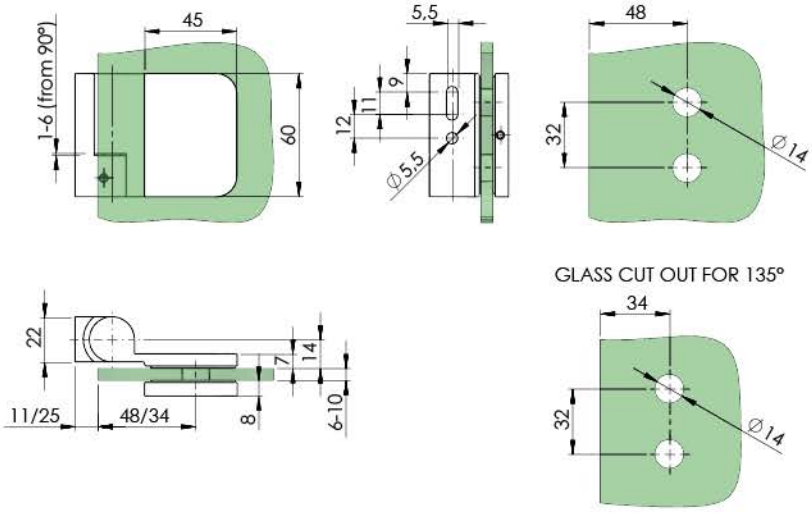

Quality	Finish	art.	Gmax (kg)/2pcs
Brass	polish	GS-MS/D-B-900-2L/P/Cr	40
		GS-MS/D-B-900-2R/P/Cr	

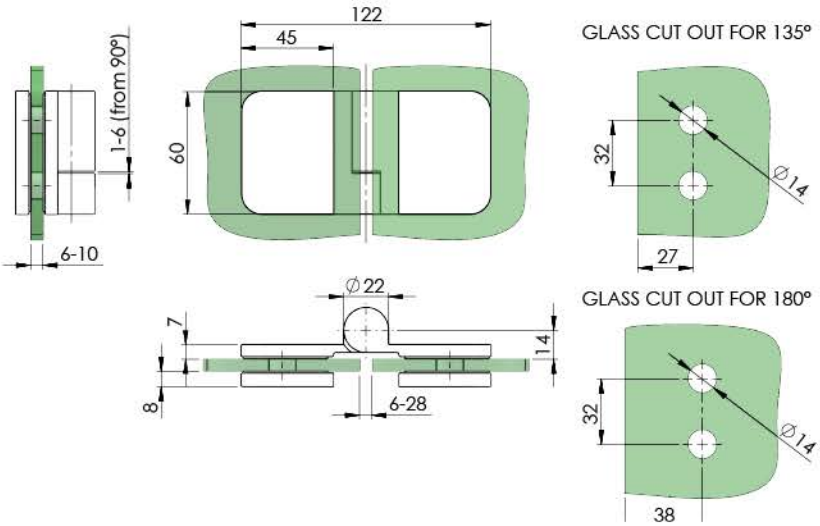

Quality	Finish	art.	Gmax (kg)/2pcs
Brass	polish	GS-MS/D-B-900-4L/P/Cr	40
		GS-MS/D-B-900-4R/P/Cr	

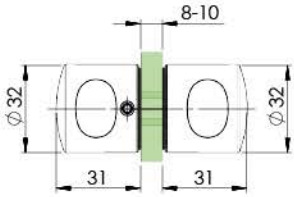

Quality	Finish	art.
AISI304	satin	GS-304/M-924/S

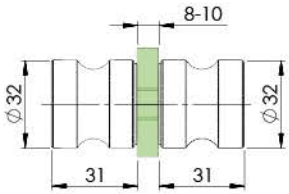

Quality	Finish	art.
AISI304	satin	GS-304/M-926/S

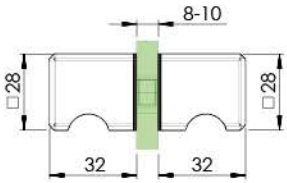

Quality	Finish	art.
Brass	polish	GS-MS/M-929/P/Cr

new

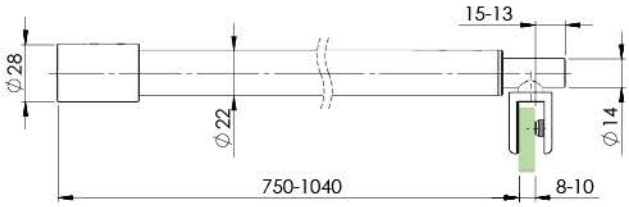

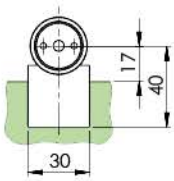

Quality	Finish	art.	glass t	mounting	L	
AISI304	satin	GS-304/ZP-925-P/Cr	8-10	wall/ glass	750-1050	new
	polish	GS-304/ZP-925-SN				new

5.6 GLASS WALLS

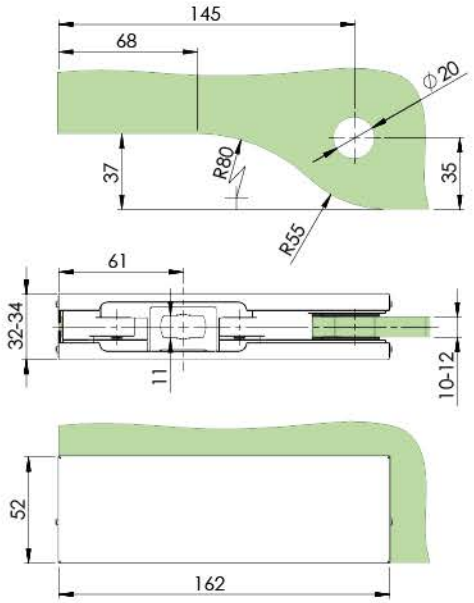

Quality	Finish	art.
AISI304	satin	GS-304/ZP-800/S-B

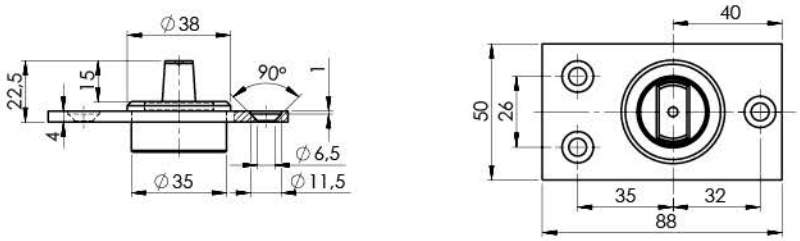

Quality	Finish	art.
AISI304	satin	GS-304/ZP-802/S-B

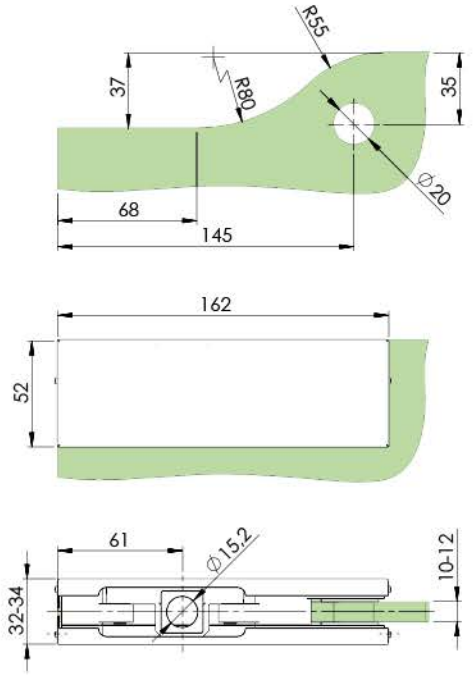

Quality	Finish	art.
AISI304	satin	GS-304/ZP-801/S-B

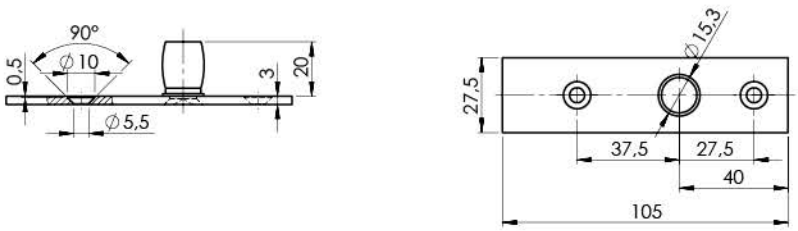

Quality	Finish	art.
AISI304	satin	GS-304/ZP-802/S

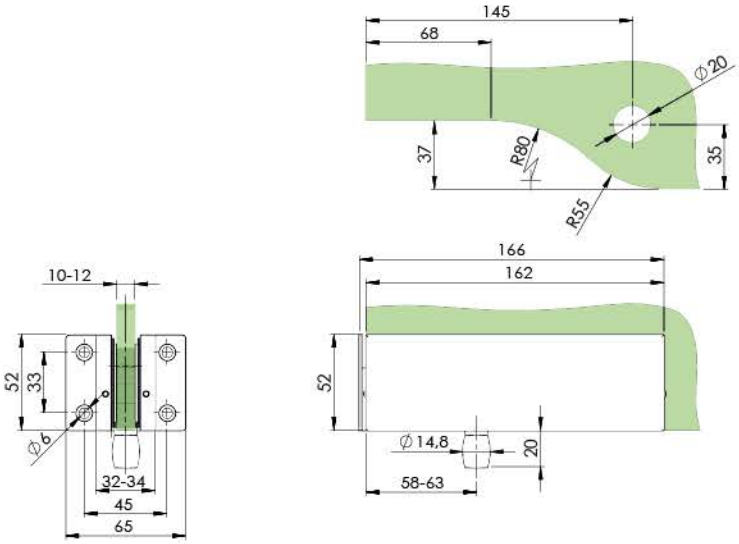

Quality	Finish	art.
AISI304	satin	GS-304/ZP-811/S

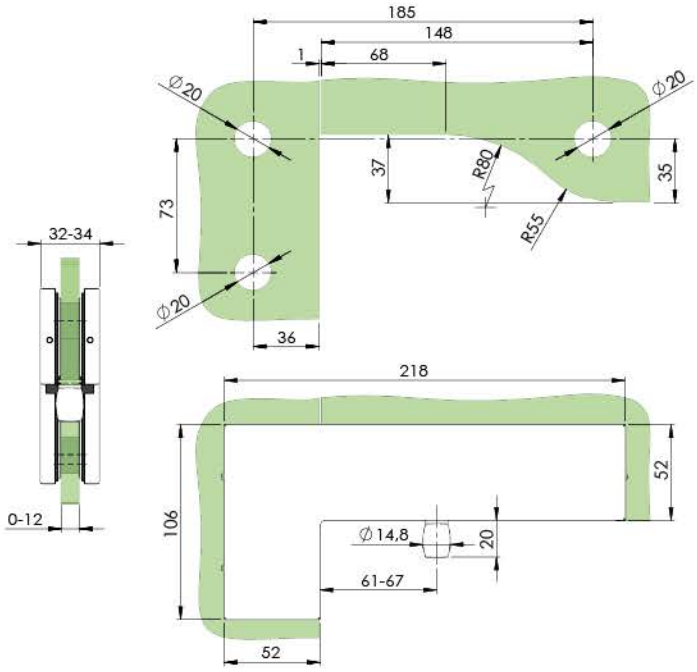

Quality	Finish	art.
AISI304	satin	GS-304/ZP-808/S

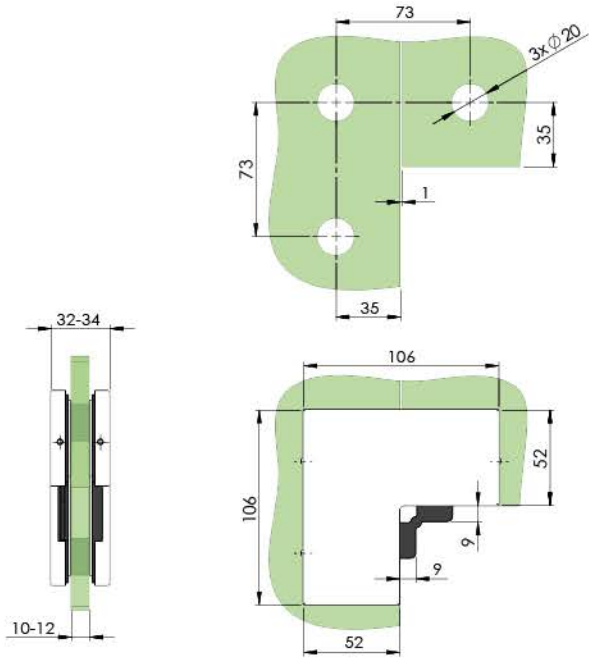

Quality	Finish	art.
AISI304	satin	GS-304/ZP-809/S

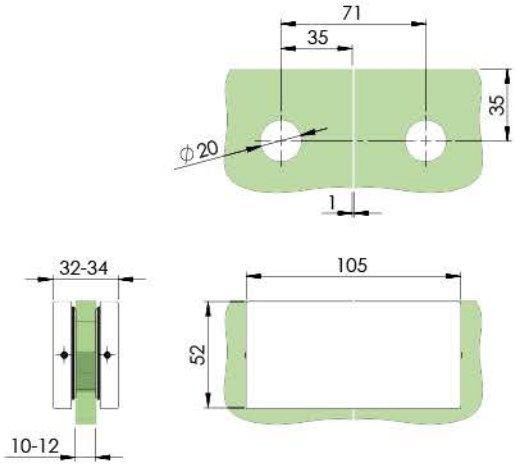

Quality	Finish	art.
AISI304	satin	GS-304/ZP-882/S

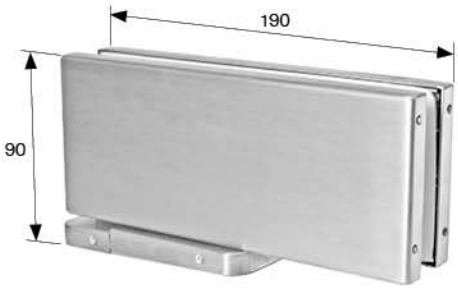

Quality	Finish	art.	glass t	Gmax (kg)	STOP	
AISI304	satin	GS-304/ZP-804/S-B	10-12	100	±90°, 0°	✓

new

Quality	Finish	art.	Gmax (kg)	STOP	
AISI304	satin	GS-304/ZP-821/S	120	±130°, 0°	✓
		GS-304/ZP-822/S-B	150		

new

new

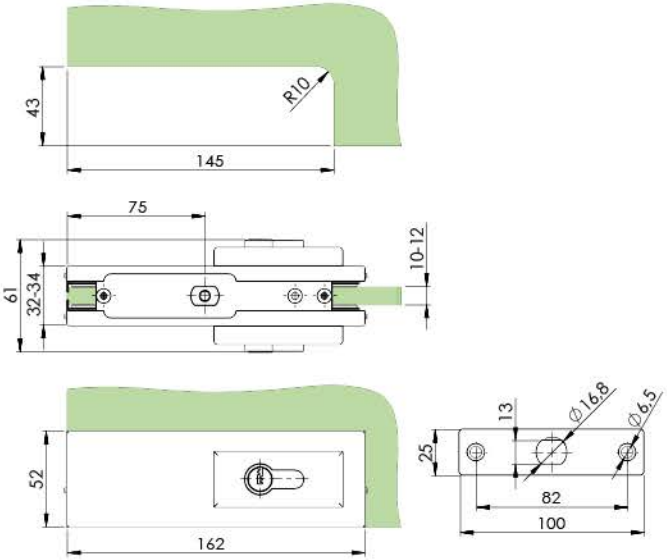

Quality	Finish	art.
AISI304	satin	GS-304/ZP-814/S

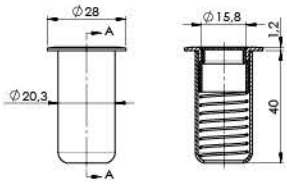

Quality	Finish	art.
AISI304	satin	GS-304/ZP-815/S

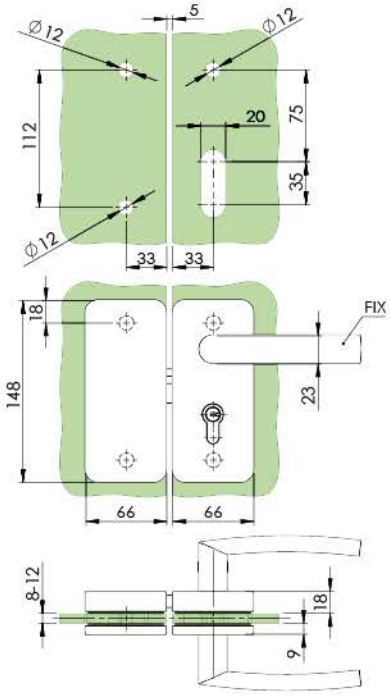

Quality	Finish	art.
AISI304	satin	GS-304/D-203/S

new

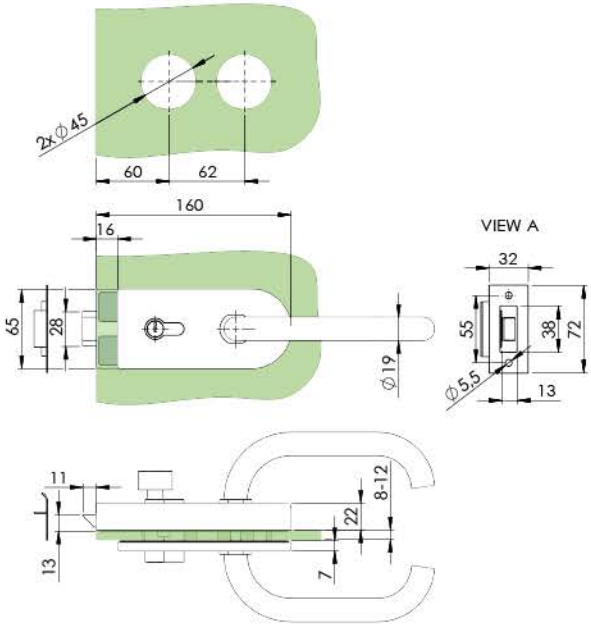

Quality	Finish	art.
AISI304	satin	GS-304/D-200/S

new

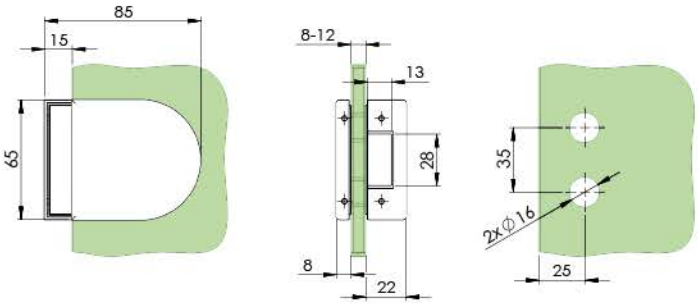

Quality	Finish	art.	compatibility
AISI304	satin	GS-304/D-L18S/S	GS-304/D-200/S GS-304/D-207/S

new

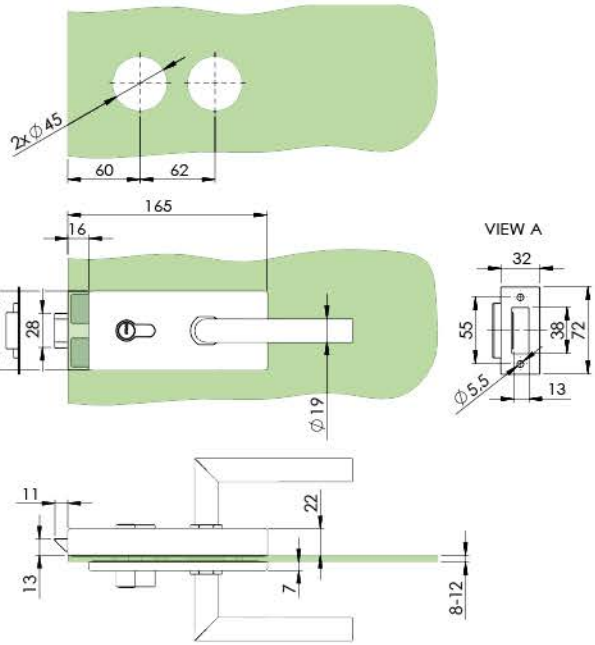

Quality	Finish	art.
AISI304	satin	GS-304/D-206/S

new

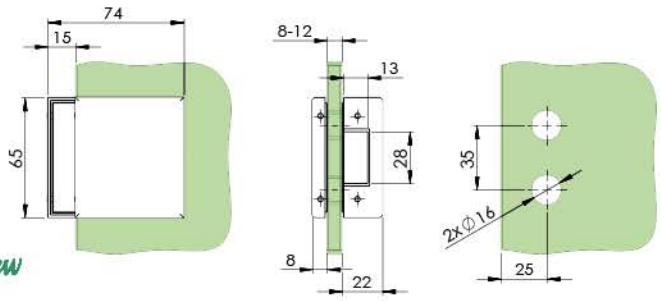

Quality	Finish	art.	compatibility
AISI304	satin	GS-304/D-L18R/S	GS-304/D-206/S

new

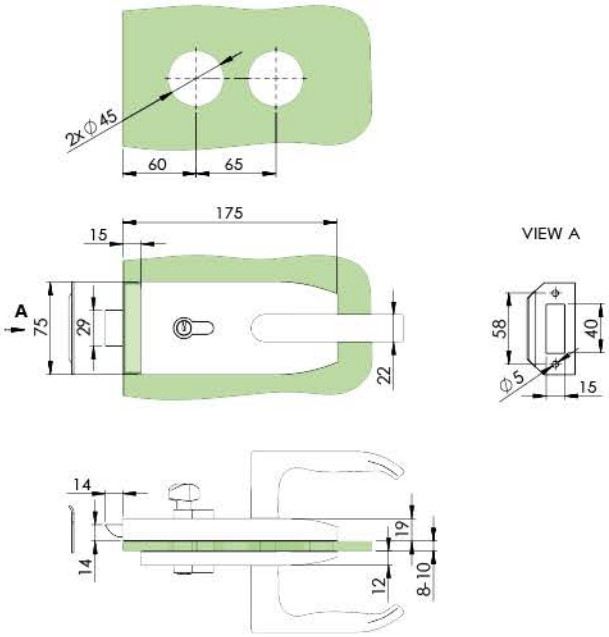

Quality	Finish	art.	
AISI304	satin	GS-304/D-201/S	new

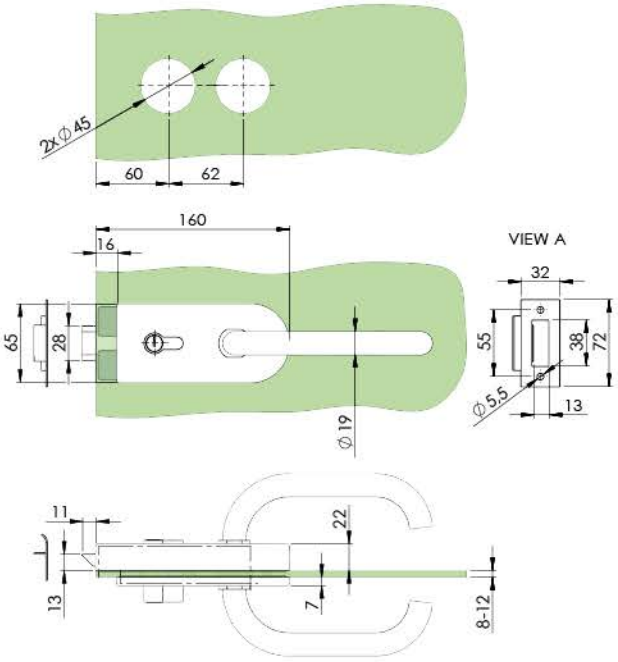

Quality	Finish	art.	
AISI304	satin	GS-304/D-207/S	new

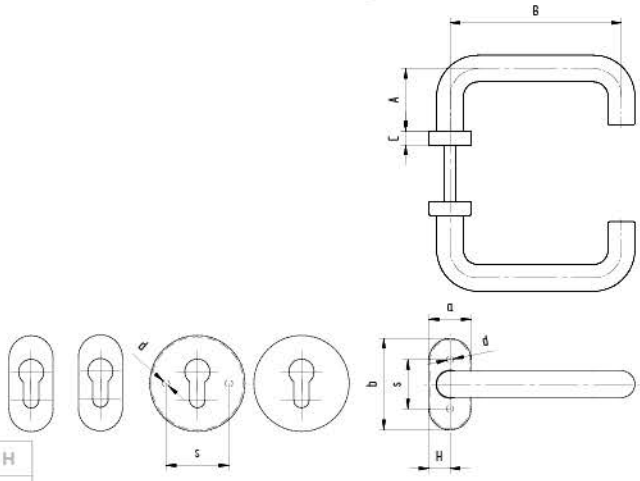

Quality	Finish	art.	A	B	C	a	b	s	d	H
AISI304	satin	D8/03	45	120	10	30	65	50	5	15

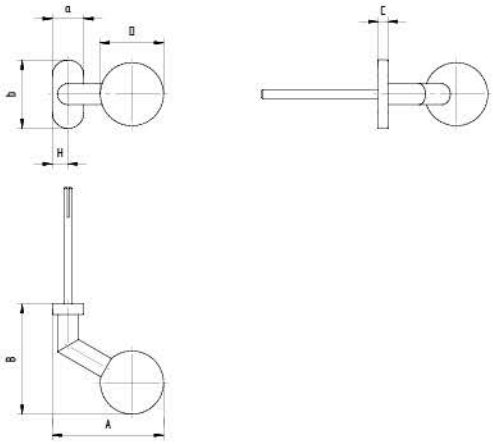

Quality	Finish	art.	A	B	C	D	a	b	H
AISI304	satin	D8/04-2-i	80	90	10	50	31	66	15

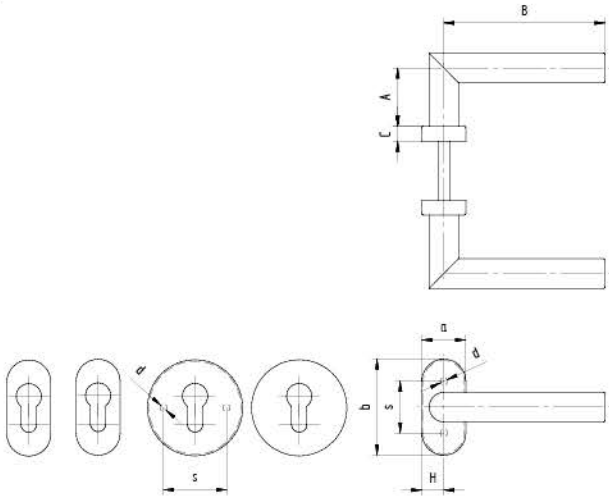

Quality	Finish	art.	A	B	C	a	b	s	d	H
AISI304	satin	D8/05	50	120	10	30	65	50	5	15

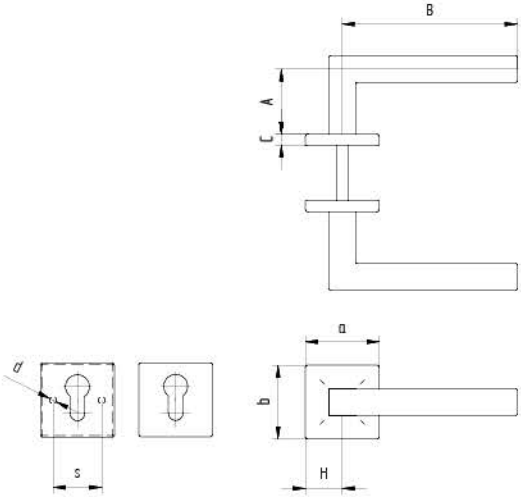

Quality	Finish	art.	A	B	C	a	b	s	d	H
AISI304	satin	D8/06	48	126	8	53	53	38	5,5	26,5

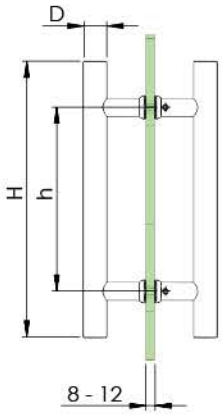

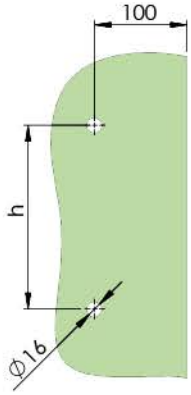

Quality	Finish	art.	D	H	h
AISI304	satin	**GS-304/M1-25-300/S**	25	300	200
		GS-304/M1-25-400/S		400	300
		GS-304/M1-25-500/S		500	400

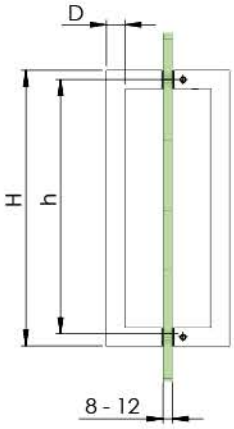

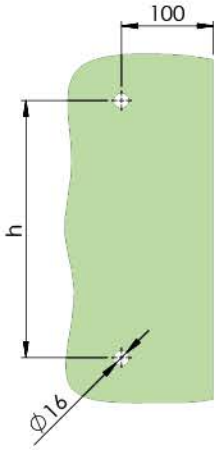

Quality	Finish	art.	D	H	h	
AISI304	satin	**GS-304/M3-20-300/S**	20	320	300	new
		GS-304/M3-20-400/S		420	400	new
		GS-304/M3-20-500/S		520	500	new

Quality	Finish	Effect	art.	axb	L
Aluminium	satin	ELOX	**GS-AL/M3-24-240/S/E**	24x24	240

5.6 GLASS WALLS

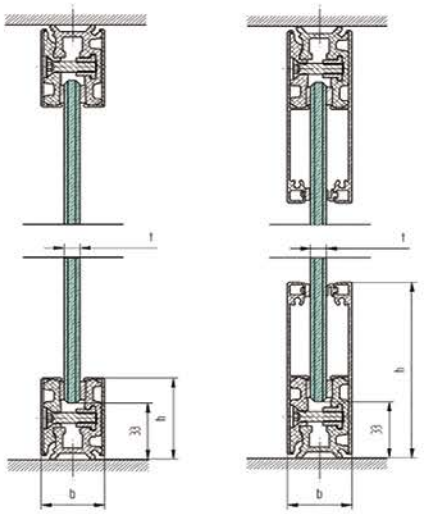

	art.	GS/ZP-002	GS/ZP-L02	GS/ZP-A02-a	GS-AL/ZP-A02/N/B	GS/ZP-A02-i	GS-AL/ZP-A02W/N/E	GS-AL/ZP-A02W/N/B	GS-304/ZP-A02W/S	GS-PVC/ZP-32666
 GS-.../N/B	GS-AL/ZP-32x46/N/B GS-AL/ZP-32x100/N/B GS-304/ZP-32x46/S GS-304/ZP-32x100/S GS-AL/ZP-32x46/N/E GS-AL/ZP-32x100/N/E						new 	new 		
		3 m	1 pcs	3 m			3m			3m
		ALUMINIUM		black	AISI304		ALUMINIUM	black	AISI304	

+

	Quality	Finish	Effect	art.	Quantity/ pairs	b x h	Glass t 8	10	12
 new	ALUMINIUM	natural	black	GS-AL/ZP-Z02A-8/N/B	1	32x46	✓		
				GS-AL/ZP-Z02A-10/N/B				✓	
				GS-AL/ZP-Z02A-12/N/B					✓
				GS-AL/ZP-Z02AW-8/N/B		33x100	✓		
				GS-AL/ZP-Z02AW-10/N/B				✓	
				GS-AL/ZP-Z02AW-12/N/B					✓
 new	AISI304	satin	-	GS-304/ZP-Z02A-8/S		32x46	✓		
				GS-304/ZP-Z02A-10/S				✓	
				GS-304/ZP-Z02A-12/S					✓
				GS-304/ZP-Z02AW-8/S		33x100	✓		
				GS-304/ZP-Z02AW-10/S		33x100		✓	
				GS-304/ZP-Z02AW-12/S		33x100			✓
	ALUMINIUM	natural	ELOX	GS-AL/ZP-Z02A-8/N/E		32x46	✓		
				GS-AL/ZP-Z02A-10/N/E				✓	
				GS-AL/ZP-Z02A-12/N/E					✓
				GS-AL/ZP-Z02AW-8/N/E		33x100	✓		
				GS-AL/ZP-Z02AW-10/N/E		33x100		✓	
				GS-AL/ZP-Z02AW-12/N/E		33x100			✓

	Quality	Finish	Effect	art.	L	Quantity/ pcs	h
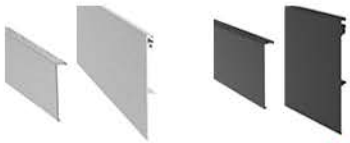 GS-.../N/B new	ALUMINIUM	natural	black	GS-AL/ZP-A02/N/B	3000	1	46
				GS-AL/ZP-A02W/N/B			
	AISI304	satin	-	GS/ZP-A02-i			
				GS-304/ZP-A02W/S			100
	ALUMINIUM	natural	ELOX	GS/ZP-A02-a			
				GS-AL/ZP-A02W/N/E			

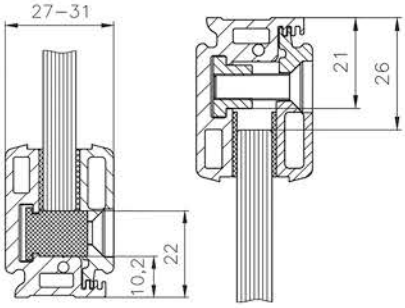

Quality	Finish	Effect	art.	L	G max	glass t
ALUMINIUM	satin	INOX	GS-304/ZP-30x38/S	3000	45 kg/m	8-12

new

1 x 3 m	9 x 1 pcs	2 x 3 m
ALUMINIUM		AISI304

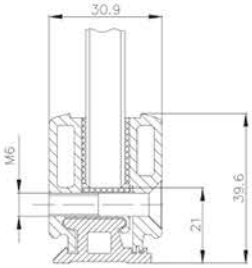

Quality	Finish	Effect	art.	L	G max	glass t
ALUMINIUM	satin	INOX	GS-304/ZP-30x40/S	3000	30 kg/m	10-12

new

1 x 3 m	9 x 1 pcs	2 x 3 m
ALUMINIUM		AISI304

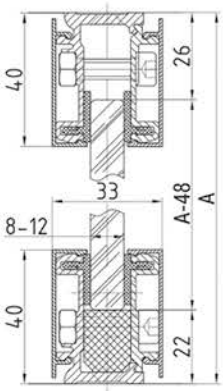

SHOWER PROFILE

Quality	Finish	Effect	art.	L	G max	glass t
ALUMINIUM	polish	INOX	GS-304/ZP-30x40/P/Cr	3000	20 kg/m	8-10

new

1 x 3 m	9 x 1 pcs	2 x 3 m
ALUMINIUM		AISI304

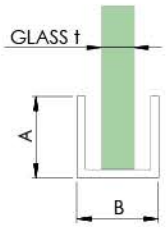

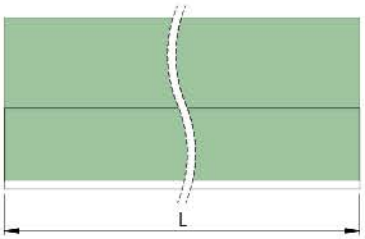

Quality	Finish	Effect	art.	A	B	L	glass t
ALUMINIUM	satin	INOX	**GS-AL/ZP-2020/S/VA**	20	20	3000	8, 10

+

2 x 3 m

GS-PVC/ZP-2020GT-8/N/T
GS-PVC/ZP-2020GT-10/N/T

Quality	Finish	Effect	art.	L	glass t
ALUMINIUM	natural	ELOX	**GS-AL/ZP-21x27/N/E**	3000	8-12

+

2 x 3 m

GS-PVC/ZP-2127-8/N/T
GS-PVC/ZP-2127-10/N/T
GS-PVC/ZP-2127-12/N/T

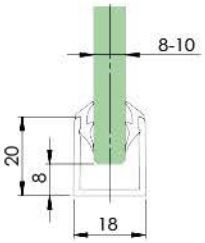

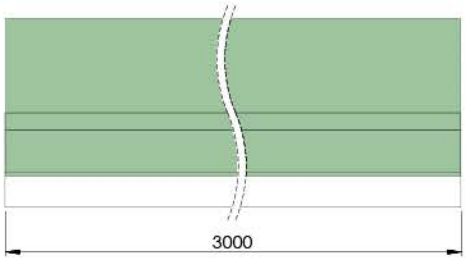

Quality	Finish	Effect	art.	L	glass t	
ALUMINIUM	natural	ELOX	**GS-AL/ZP-2018/N/E**	3000	8-10	new
	satin	INOX	**GS-AL/ZP-2018/S/VA**			new

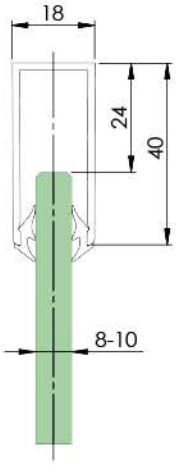

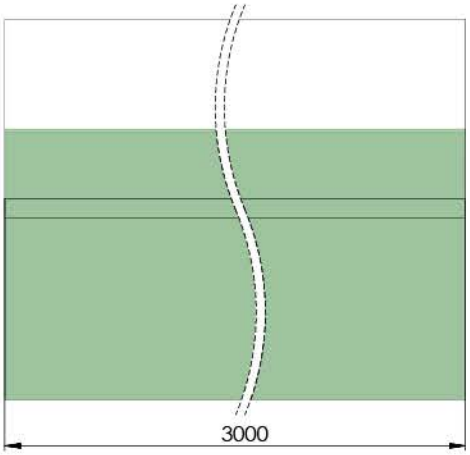

Quality	Finish	Effect	art.	L	glass t	
ALUMINIUM	natural	ELOX	**GS-AL/ZP-4018/N/E**	3000	8-10	new
	satin	INOX	**GS-AL/ZP-4018/S/VA**			new

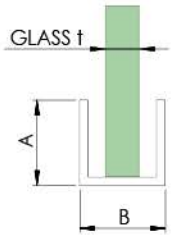

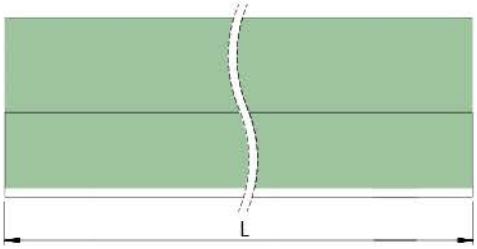

Quality	Finish	Effect	art.	A	B	L	glass t	
ALUMINIUM	polish	ELOX	**GS-AL/ZP-1510/P/Cr**	15	10	3000	6	new
			GS-AL/ZP-2012/P/Cr	20	12		8	new
			GS-AL/ZP-2014/P/Cr	20	14		10	new

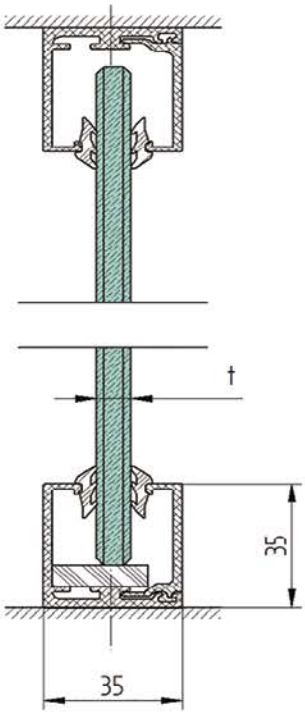

Quality	Finish	Effect	art.	L	glass t
ALUMINIUM	natural	ELOX	**GS-AL/ZP-3535/N/E**	3000	6-10

new

+

GS-PVC/G-3535-N/B

GS-PVC/C-3535

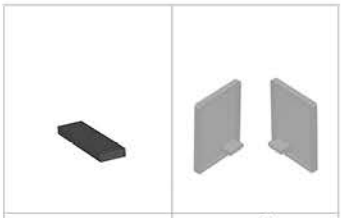

22x6x100	Left/Right
PVC	

GLASS			L	Quantity/ pcs
6	8	10		
GS-PVC/ZP-3535-6/N/B	GS-PVC/ZP-3535-8/N/B	GS-PVC/ZP-3535-10/N/B	3000	2
new	new	new		

A/6925-040

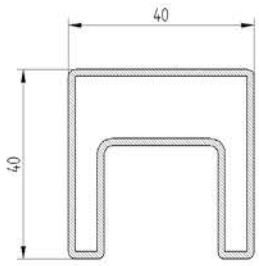

+

Profile	GLASS	L	Quantity/ pcs
	8 - 11		
	A19/5042-008	5000	1

A/6900-020

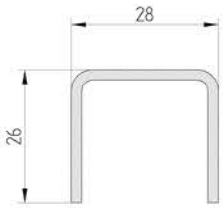

+

Profile	GLASS	L	Quantity/ pcs
	8 - 11		
	A19/5042-008	2500	1

GS-AL/ZP-20x30/S/VA

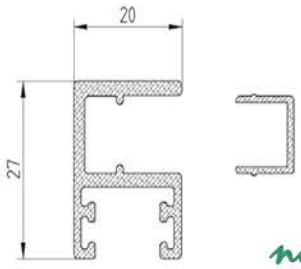

new

+

Profile	GLASS		L	Quantity/ pcs
	8	10		
	GS-PVC/ZP-2030-8/N/B	GS-PVC/ZP-2030-10/N/B	3000	1
	new	new		

5.6 GLASS WALLS

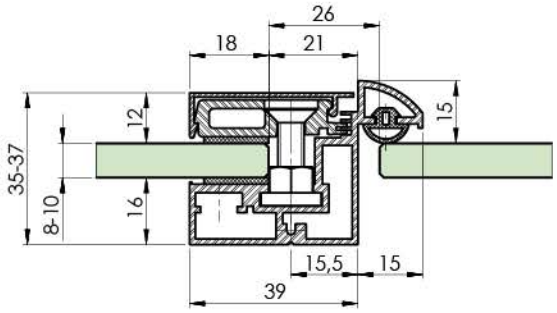

Quality	Finish	Effect	art.	glass t
ALUMINIUM	natural	ELOX	GS-AL/ZG-L-N-E	8-10
			GS-AL/ZG-R-N-E	

new

new

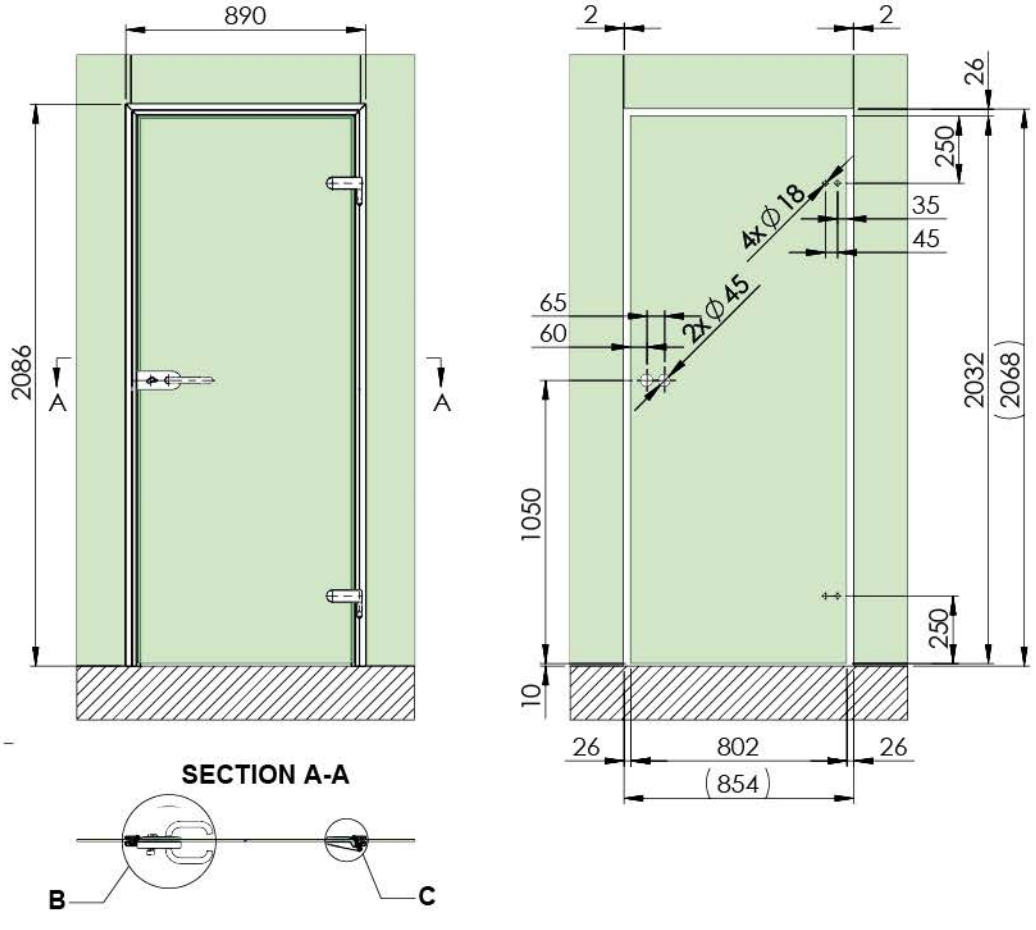

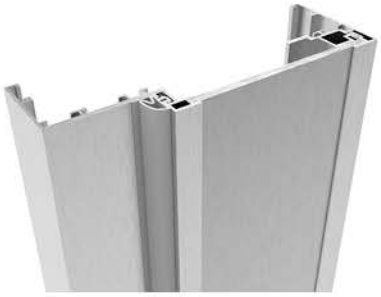

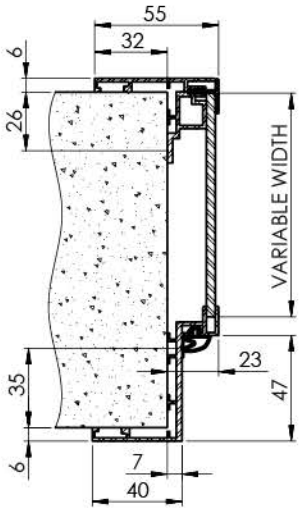

Quality	Finish	Effect	art.
ALUMINIUM	natural	ELOX	**GS-AL/ZU-N-E**

new

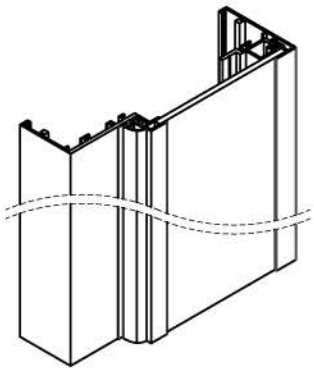

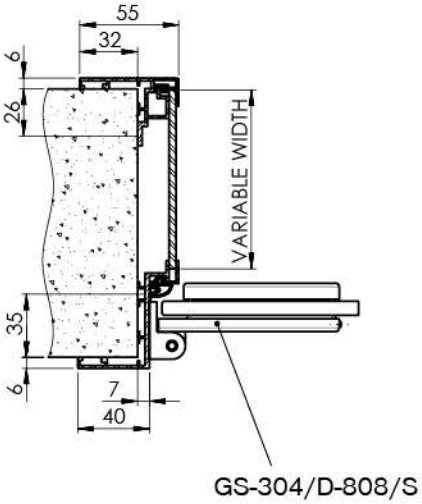

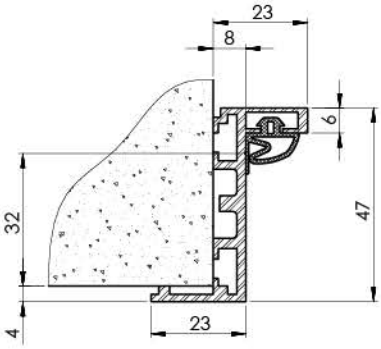

Quality	Finish	Effect	art.	
ALUMINIUM	natural	ELOX	GS-AL/ZZ-6000-N-E	new
			GS-AL/ZL-6000-N-E	new

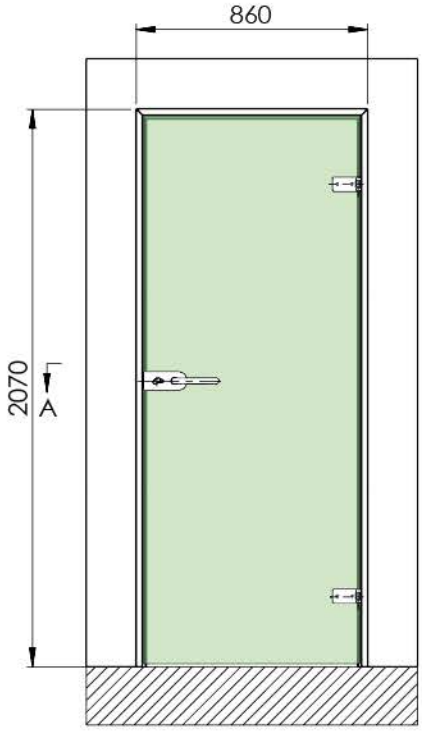

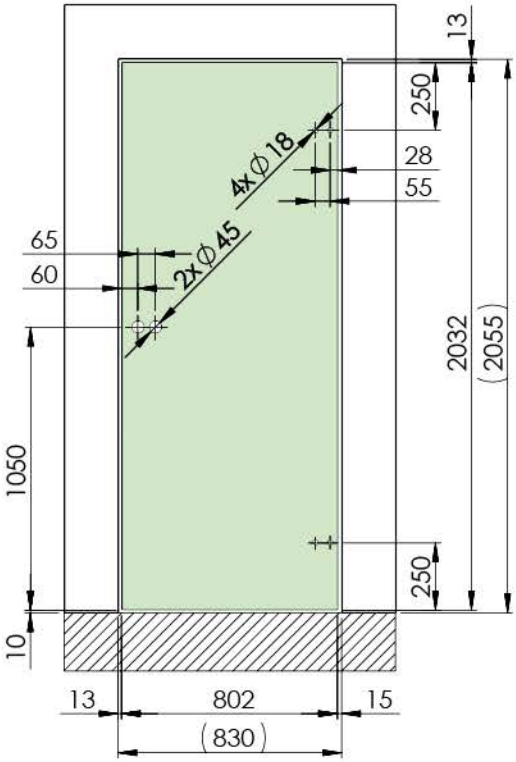

SECTION A-A

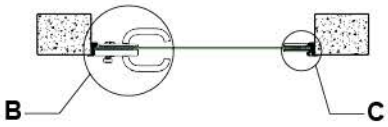

DETAIL B

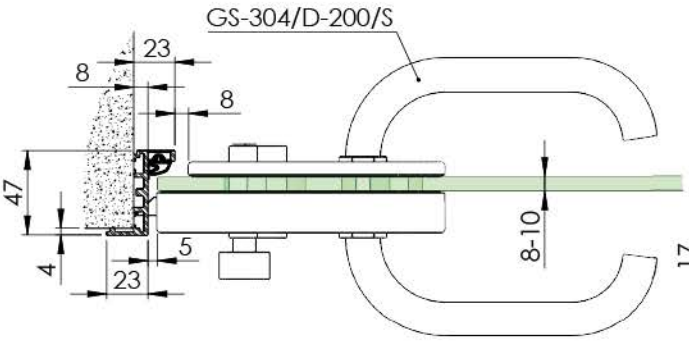

DETAIL C

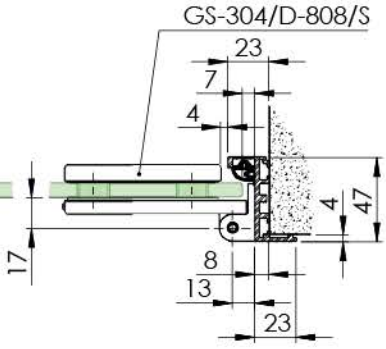

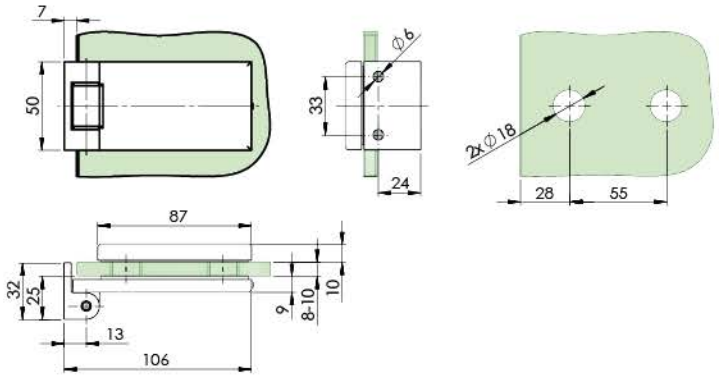

Quality	Finish	Effect	art.	
ALUMINIUM	satin	ELOX	**GS-AL/D-808/S**	new

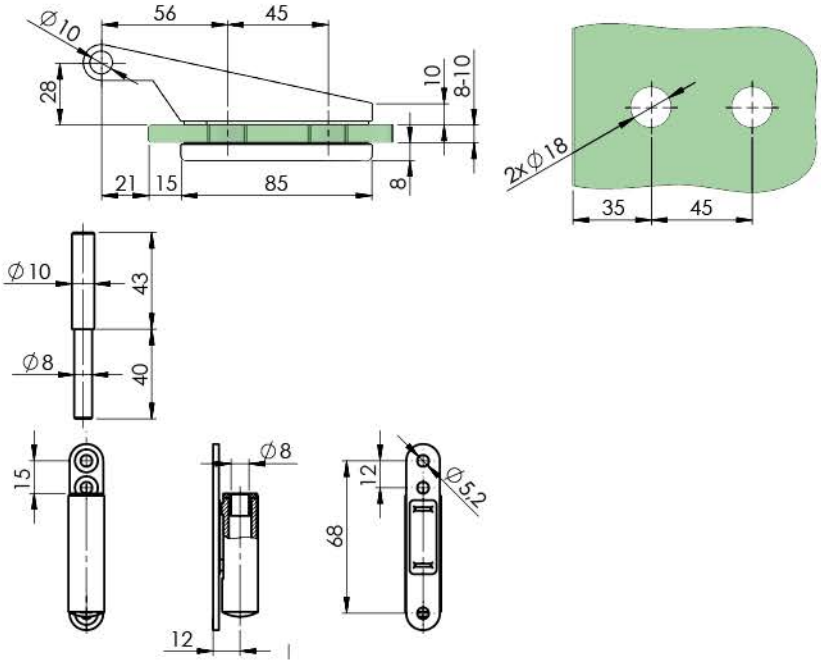

Quality	Finish	Effect	art.	G max/2pcs	
AISI304	satin	INOX	**GS-304/D-805/S-B**	45	new
ALUMINIUM		ELOX	**GS-AL/D-805/S/E-B**		new

6 STAIRS, ACCESORIES

6.1 SEGMENT STAIRS

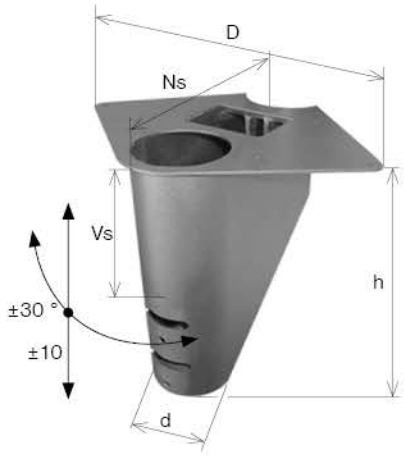

NS	art.	V_s (min)	V_s (max)	N_s	D	d	h	AISI304	Fe
NS240	NS240-N1	140		240	395	108	138		✓
	NS240-N2	180					310		
	NS240	170	190				350		
	NS240-NV	170	190				350		
NS270	NS270-N1	130		270	395	132	128		✓
	NS270-N2	170					290		
	NS270	160	180				350	✓	
	NS270-NV	160	180				350		

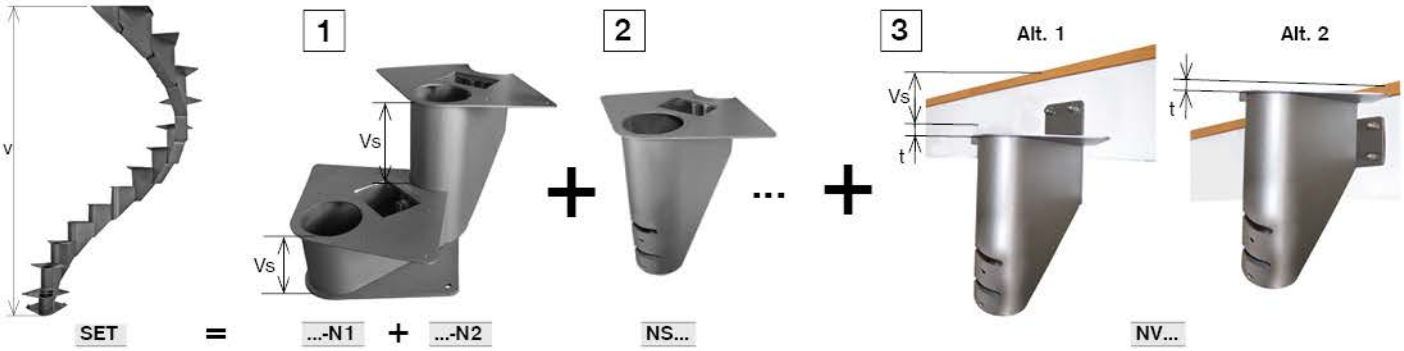

Stair set NS240(t=40)

art.	v(mm) max.	v(mm) min.	NS240 -N1	NS240 -N2	NS240 -NV	NS240 Alt. 1	NS240 Alt. 2
	180		1x	-	-	-	-
	360		1x	1x	-	-	-
	550	530	1x	1x	1x	-	-
	740	700	1x	1x	1x	-	1x
	930	870	1x	1x	1x	1x	2x
	1120	1040	1x	1x	1x	2x	3x
	1310	1210	1x	1x	1x	3x	4x
	1500	1380	1x	1x	1x	4x	5x
	1690	1550	1x	1x	1x	5x	6x
	1880	1720	1x	1x	1x	6x	7x
	2070	1890	1x	1x	1x	7x	8x
	2260	2060	1x	1x	1x	8x	9x
NS240/V245-223	**2450**	**2230**	**1x**	**1x**	**1x**	**9x**	10x
NS240/V264-240	**2640**	**2400**	**1x**	**1x**	**1x**	**10x**	11x
NS240/V283-257	**2830**	**2570**	**1x**	**1x**	**1x**	**11x**	12x
NS240/V302-274	**3020**	**2740**	**1x**	**1x**	**1x**	**12x**	13x
	3210	2910	1x	1x	1x	13x	14x

Stair set NS270(t=40)

art.	v(mm) max.	v(mm) min.	NS270 -N1	NS270 -N2	NS270 -NV	NS270 Alt. 1	NS270 Alt. 2
	170		1x	-	-	-	-
	340		1x	1x	-	-	-
	520	500	1x	1x	1x	-	-
	700	660	1x	1x	1x	-	1x
	880	820	1x	1x	1x	1x	2x
	1060	980	1x	1x	1x	2x	3x
	1240	1140	1x	1x	1x	3x	4x
	1420	1300	1x	1x	1x	4x	5x
	1600	1460	1x	1x	1x	5x	6x
	1780	1620	1x	1x	1x	6x	7x
	1960	1780	1x	1x	1x	7x	8x
	2140	1940	1x	1x	1x	8x	9x
	2320	2100	1x	1x	1x	9x	10x
NS270/V250-226	**2500**	**2260**	**1x**	**1x**	**1x**	**10x**	11x
NS270/V268-242	**2680**	**2420**	**1x**	**1x**	**1x**	**11x**	12x
NS270/V286-258	**2860**	**2580**	**1x**	**1x**	**1x**	**12x**	13x
NS270/V304-274	**3040**	**2740**	**1x**	**1x**	**1x**	**13x**	14x

assembly video

YouTube umakov

virtual studio

applications

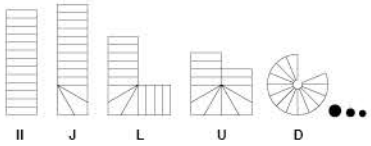

simulation template

NS240-model

6.2 ACCESORIES

Quality	Finish	art.	M	L
AISI304	raw	A-DIN 914-A2 M5x5	5	5
		A-DIN 914-A2 M6x6	6	6

Quality	Finish	art.	M	L
AISI304	raw	A-DIN 913-A2 M8x22	8	22
		A-DIN 913-A2 M8x80		80
		A-DIN 913-A2 M10x35	10	35
		A-DIN 913-A2 M10x100		100

new

Quality	Finish	art.	M	L
AISI304	raw	A-DIN 7991-A2 M5x10	5	10
		A-DIN 7991-A2 M5x16		16
		A-DIN 7991-A2 M5x20		20
		A-DIN 7991-A2 M6x8	6	8
		A-DIN 7991-A2 M6x10		10
		A-DIN 7991-A2 M6x16		16
		A-DIN 7991-A2 M6x20		20
		A-DIN 7991-A2 M8x110	8	110
AISI316		A4-DIN 7991 M5x16	5	16
		A4-DIN 7991 M8x20	8	20

new

Quality	Finish	art.	M	L
AISI304	raw	A-DIN 7380-A2 M5x12	5	12
		A-DIN 7380-A2 M6x12	6	12
		A-DIN 7380-A2 M8x20	8	20
AISI316		A4-DIN 7380 M5x12	5	12
		A4-DIN 7380 M8x20	8	20

Quality	Finish	art.	M	L
AISI304	raw	A-DIN 7991-A2 M5x16-Fix	5	16
		A-DIN 7991-A2 M6x8-Fix	8	8

new
new

Quality	Finish	art.	M	L
AISI304	raw	A-DIN 7380-A2 M5x12-Fix	5	12
		A-DIN 7380-A2 M6x12-Fix	6	
		A-DIN 7380-A2 M8x20-Fix	8	20

new
new
new

Quality	Finish	art.	M	L
AISI304	raw	A2-DIN 912 M5x20	5	20
		A2-DIN 912 M8x20	8	

new

Quality	Finish	art.	M	L	
AISI304	raw	A-DIN 917 M8	8	10	new
		A-DIN 917 M10	10	12	new

Quality	Finish	art.	M	L
AISI304	raw	A-DIN 934 M6	6	5
		A-DIN 934 M8	8	6,5
		A-DIN 934 M10	10	8
		A-DIN 934 M12	12	10
AISI316		A4-DIN 934 M10	10	8

Quality	Finish	art.	M	L
AISI304	raw	A-DIN 1587-A2 M6	6	12
		A-DIN 1587-A2 M8	8	15
		A-DIN 1587-A2 M10	10	18
		A-DIN 1587-A2 M12	12	22
AISI316		A4-DIN 1587 M10	10	18

Quality	Finish	art.	M	s	t	
AISI304	raw	A-DIN 562 M6	6	10	3,2	new
		A-DIN 562 M8	8	13	4	new
		A-DIN 562 M10	10	16	5	new
AISI316		A4-DIN 562 M5	5	8	2,7	new

Quality	Finish	art.	M
Fe	Zinc	WOOD/M8-D	8
		WOOD/M10-D	10
		WOOD/M12-D	12

Quality	Finish	art.	M	L	
AISI304	raw	A-DIN 975 M6	6	1000	
		A-DIN 975 M8	8		
		A-DIN 975 M10	10		
		A-DIN 975 M12	12		new
		A-DIN 975 M6-3M	6	3000	new
		A-DIN 975 M8-3M	8		new
		A-DIN 975 M10-3M	10		new
		A-DIN 975 M12-3M	12		new
AISI316		A4-DIN 975 M10	10	1000	
		A4-DIN 975 M6-3M	6	3000	new
		A4-DIN 975 M8-3M	8		new
		A4-DIN 975 M10-3M	10		new
		A4-DIN 975 M12-3M	12		new

Quality	Finish	art.	M	D	L	
AISI304	raw	A-DIN 6334V M8x25-A2	8	11	25	
		A-DIN 6334V M10x25-A2	10	13		
Fe	Zn	DIN 6334V M6x30-Zn	6	9	30	new
		DIN 6334V M8x30-Zn	8	11		
		DIN 6334V M10x30-Zn	10	13		

Quality	Finish	art.	M	L
AISI304	raw	A-FTT-M5	5	12
		A-FTT-M6	6	15
		A-FTT-M8	8	16,5

art.	Compatibility
Q8/79	A-FTT-...

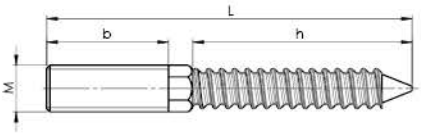

Quality	Finish	art.	M	L	b	h	
AISI304	raw	A-DIN 9210 M8x60-A2	8	60	20	37	new
		A-DIN 9210 M10x100-A2	10	100	30	57	new
AISI316		A4-DIN 9210 M8x60	8	60	20	37	new

Quality	Finish	art.	M	L
AISI304	raw	A-DIN 7505A 5x20	5	20
		A-DIN 7505A 5x35		35

Quality	Finish	art.	M	L
AISI304	raw	A-PH 5x20	5	20
		A-PH 5x35		35

Quality	Finish	art.	d	t
AISI304	raw	A-DIN 125-A2 M5	5	1
		A-DIN 125-A2 M6	6	1,6
		A-DIN 125-A2 M8	8	1,6
		A-DIN 125-A2 M10	10	2
		A-DIN 125-A2 M12	12	2,5

Quality	Finish	art.	L	d
AISI304	raw	A-DIN 7337-A2 4,8x20	20	4,8

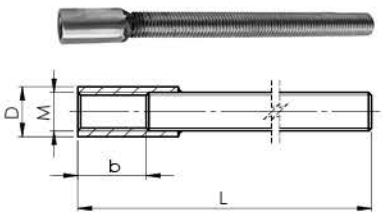

Quality	Finish	art.	M	D	L
AISI304	raw	A19/27-M6	6	9	140
		A19/27-M8	8	11	
		A19/27-M10	10	13	

Quality	Finish	art.	M	L	d
AISI304	raw	A5/08-105x11xM8	8	105	11

Quality	Finish	art.	M	L	
AISI304	raw	A-Q5/06-10x120CE	10	120	new
Fe	Zn	Q5/06-10x95CE	10	95	
		Q5/06-8x100CE	8	92	
		Q5/06-12x103CE	12	103	
		Q5/06-12x118CE	12	118	
		Q5/06-10x120CE	10	120	
		Q5/06-12x128CE	12	128	
		Q5/06-16x123CE	16	123	
		Q5/06-16x138CE	16	138	

Quality	Finish	art.	M	L	d	
Fe	Zn	Q5/08-FH12-50	8	125	12	
		Q5/08-FH12-50-B				new
AISI316	raw	A14/08-FH12-50				new

Quality	Finish	art.	M	L	d
Fe	Zn	Q5/08-TNTR08-8x52	8	52	12

Quality	Finish	art.	D	d	L
NYLON	gray	Q5/07-8 NYLON	8	2,5-4	40
		Q5/07-10 NYLON	10	3-6	50
		Q5/07-12 NYLON	12	4-8	60

A/1962-000

A/1962-042

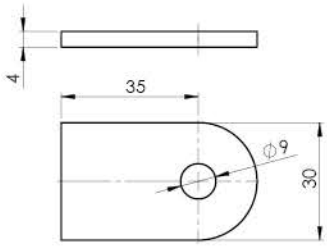

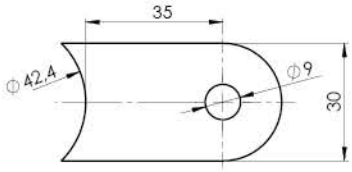

Quality	Finish	art.	
AISI304	satin	A/1962-000	new
		A/1962-042	new

A/1963-000

A/1963-042

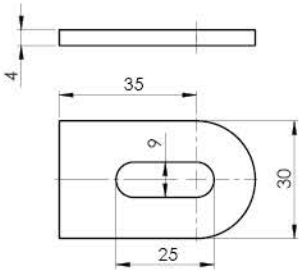

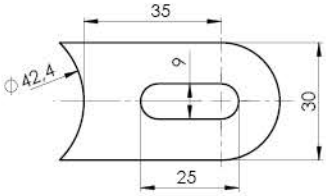

Quality	Finish	art.	
AISI304	satin	A/1963-000	new
		A/1963-042	new

art.	description
Q5/03-300	300ml, hobby

art.	description
Q5/03-400	400ml, profi

art.	ml	description
Q5/01GF-300 Nordic		-20°C
Q5/01GF-400 Nordic		-20°C
Q5/01GF-300		
Q5/01GF-400		

top

art.	ml	description
Q5/01TK-300 Winter		-20°C
Q5/01TK-400 Winter		-20°C
Q5/01TK-300		
Q5/01TK-400		

art.	description
Q5/04	M17, h215

art.	description
Q8/77	adjustable

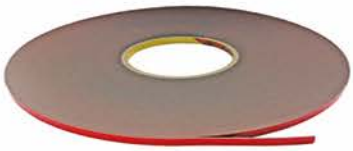

art.	t	b	L
Q9/03-0,2x9	0,2	9	50
Q9/03-3x12	3	12	16,5

art.	ml	description
Q5/05TR-310		Silicone

art.	D	d	L
A19/05-010	49	11	10
A19/05-030			30
A19/05-050			50
A19/05-100			100

new

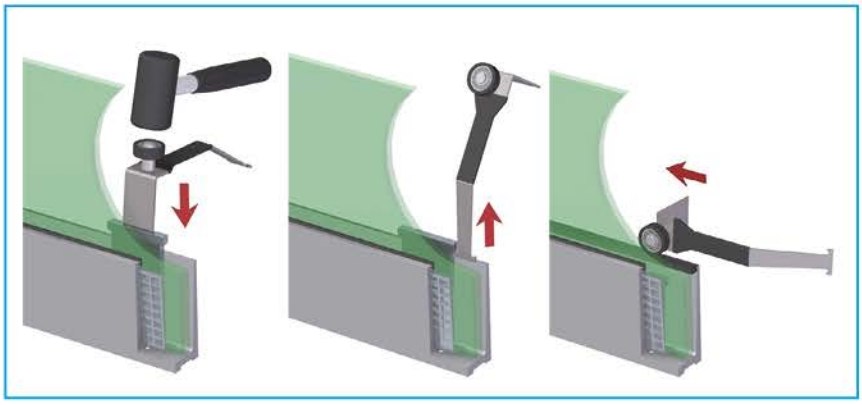

art.
AL/glass-mont

Quality	Finish	art.
AISI304	raw	A19/model741-8

Quality	Finish	art.
PVC	satin	A19/04-PVC
	polish	A19/04-PVC-L

art.	M
A19/2,5	5

Quality	Finish	art.	M
AISI304	raw	Q10/Therm-M12	12-12

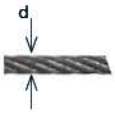

art.	d
Q8/95	3-8

Quality	art.	Ø
HSS-CO5	A-DRILL-M5	4
	A-DRILL-M6	4,8
	A-DRILL-M8	6,4

Quality	art.	DRILL
HSSE	Q8/SCREW-M5	Q8/DRILL-4
	Q8/SCREW-M8	Q8/DRILL-6,5
	Q8/SCREW-M10	Q8/DRILL-8

Quality	art.	Ø
TC	Q8/DRILL-4-HRC-SHORT	
	Q8/DRILL-6,5-HRC-SHORT	
	Q8/DRILL-9-HRC-SHORT	

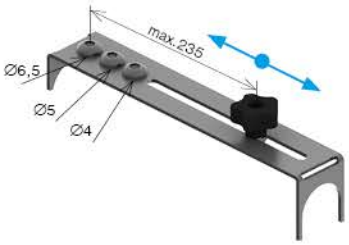

Quality	art.	Ø	☐
AISI304	A/40580-ECO	42,4	-

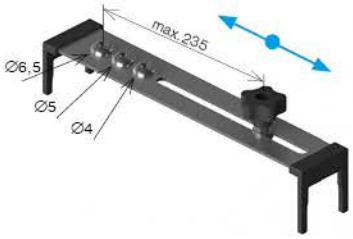

Quality	art.	Ø	☐
AISI304	A/40580-PLASTIC	42,4	40

new

YouTube umakov

REGULAR technology

Quality	art.
TC	A/FDRILL-M3F
	A/FDRILL-M4F
	A/FDRILL-M5F
	A/FDRILL-M6F
	A/FDRILL-M8F
	A/FDRILL-M10F
	A/FDRILL-M12F

Quality	art.
TC	A/FDRILL-M3C
	A/FDRILL-M4C
	A/FDRILL-M5C
	A/FDRILL-M6C
	A/FDRILL-M8C
	A/FDRILL-M10C
	A/FDRILL-M12C

Quality	art.
HSSE	A/FTAP-M3
	A/FTAP-M4
	A/FTAP-M5
	A/FTAP-M6
	A/FTAP-M8
	A/FTAP-M10
	A/FTAP-M12

art.
Q/INOX-INSTALL-SET new

art.	PCS
A/Glue-10g-C	1x
A-DRILL-M5	
Q1/RN01-125x1	
Q1/L01-125-40	
Q1/G01	
A/spray-WS	

art.	g
A/Glue-10g-C	10

art.	g
A/Glue-20g	20

art.	g
A/Glue-50g-C	50
A/Glue-50g-D	

top new

art.	description
W/glue-25ml	wood

art.	ml
A/Cleaner-500ml	500

YouTube umakov

art.	ml
A/spray-WS	400

top

art.	description
Q1/RN01-125x1	cutting disc

top

art.	description
Q1/L01-125-40	flap disc
Q1/L01-125-80	flap disc
Q1/L01-125-120	flap disc

art.	∅	description
Q1/B02-INOX	3-45	Pipe cutting

art.	compatibility
Q1/B02-INOX-RK	Q1/B02-INOX

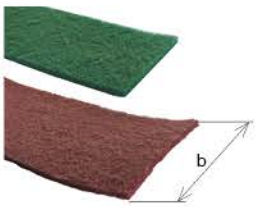

art.	b	granularity
Q1/G01	100	360

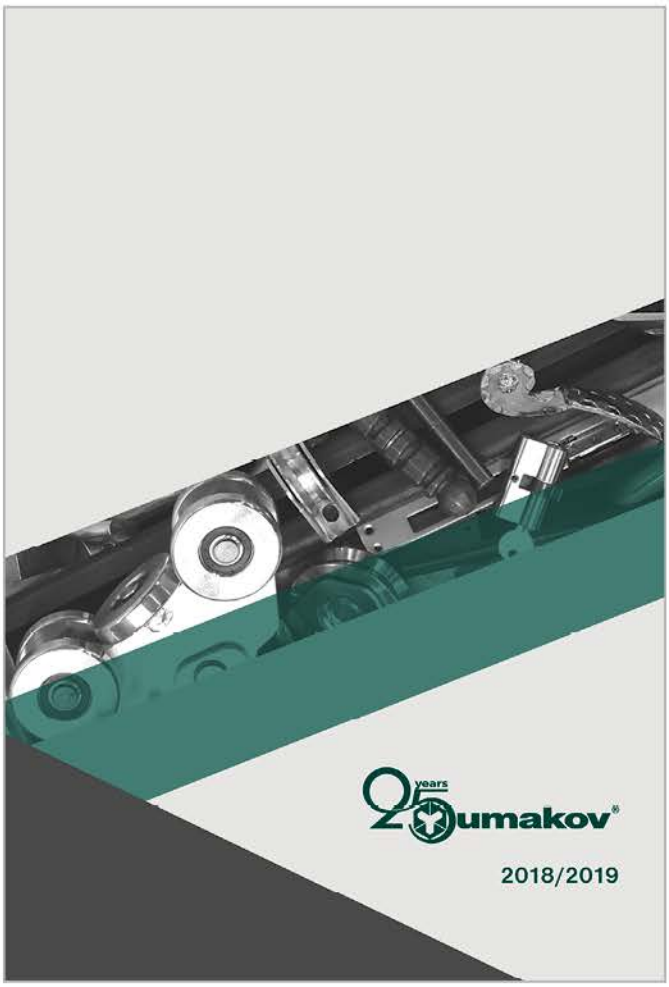

SAMONOSNÉ BRÁNY - VOZÍKY
CANTILEVER GATES - CARRIAGES

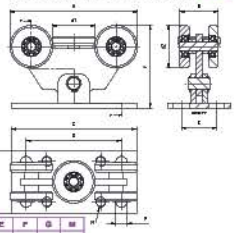

	Quality	Finish	v	v max	d1	d2	A	B	C	D	E	F	G	M
H/34BP-4-60x60	Fe	Zn	128	-	50	50	165	44	145	115	60	13	100	16
H/34BP-4-60x60-NYLON new														
H8/34-4-60x60	AISI304	raw												
H/34BP-4-70x70	Fe	Zn	130	-	60	60	195	58	200	152	55	17		
H/34BP-4-80x80			132	-	68	68	203	61	200	152	56	18		

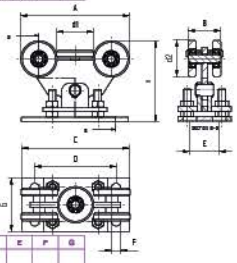

	Quality	Finish	v	v max	d1	d2	A	B	C	D	E	F	G
H/34-4-70x70P	Fe	Zn	150	170	60	60	195	58	200	152	55	17	100
H/34-4-70x70-NYLON													
H/34-4-80x80P			151	171	68	68	203	61					
H/34-4-80x80-NYLON													
H8/34-4-80x80 new	AISI304	raw											

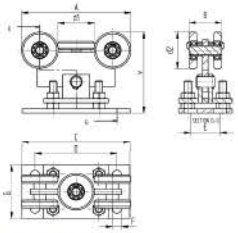

	Quality	Finish	v	v max	d1	d2	A	B	C	D	E	F	G
H/34-4-80x80PL new	Fe	Zn	154	176	68	68	212	61	180	140	60	18	120

KOLIESKOVÉ BRÁNY - KOLIESKA
ROLLING GATES - WHEELS

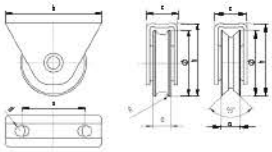

	Quality	Finish	Ø	H	h	R	a	b	c	x	d	Qmax (kg) (2xH/31...)			
H/31U-60	Fe	Zn	58	73	64	8	17	85	28	55	9	200	✓	-	-
H/31U-80C			78	95	85		20	100	24	105		300			
H8/31U-80-R10									35						
H/31U-90			88	108	100			130							
H/31U-100			98	120	105		22		36			400			
H/31V-60			58	74	64		17	85	28	55		200	-	✓	-
H/31V-80C			78	95	85	-	20	100	34	70	9	300			
H8/31V-80	AISI304	raw													
H/31V-100	Fe	Zn	98	118	106		22	130	35	105		350			

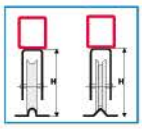

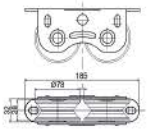

	Quality	Finish	Ø	H	Qmax (kg) (2xH/31...)			
H/31V-2-80 HEAVY new	Fe	Zn	78	97	500	-	✓	-

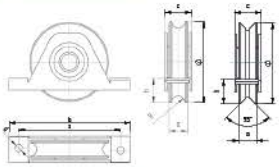

	Quality	Finish	Ø	H	h	R	a	b	c	x	d	Qmax (kg) (2xH/38...)			
H/38U-80C	Fe	Zn	78	35	27	8	20	125	32	110	9	250	✓	-	-
H8/38U-80-R8	AISI304	raw				10	23								
H/38U-90	Fe	Zn	88	38	24	8	20	150	32	130		300			
H/38U-100			98	45	29		22			127					
H/38V-80C			78	37	28	-	20	125	34	112	9	250	-	✓	-
H8/38V-80	AISI304	raw													
H/38V-100	Fe	Zn	98	44	34		22	150	32	127		300			

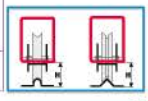

KRÍDLOVÉ BRÁNY - ZÁVESY FLEX
SWING GATES - FLEX HINGES

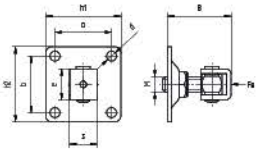

	Quality	Finish	M	B	d	h1±h2	a	b	e	x	Qmax (kg)	
D4/53-M16	Fe	Zn	16	55-75	10,5	60x60	60	60	33	29	60	✓
D4/53-M16CA				55-80		75x75	55	55	45	30		
D6/53-M16	AISI304	raw										
D4/53-M18	Fe	Zn	18	55-85		90x90	68	68	36	30	80	✓
D4/53-M18CA												
D4/53-M20			20	60-90		100x100	74	74	43	30	100	✓
D4/53-M20CA new												
D6/53-M20	AISI304	raw					75	75	35			
D4/53-M24	Fe	Zn	24	70-115		120x120	90	90	50	35	150	

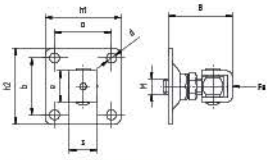

	Quality	Finish	M	B	d	h1±h2	a	b	e	x	Qmax (kg)
D4/53-M16-K	Fe	Zn	16	64-75	10,5	60x60	60	60	33	29	60
D6/53-M16-K new	AISI304	raw		64-80		75x75	55	55	45	30	
D4/53-M18-K	Fe	Zn	18	64-85		90x90	68	68	36	30	80
D4/53-M20-K			20	69-90		100x100	74	74	43		100
D6/53-M20-K new	AISI304	raw					75	75	35		
D4/53-M24-K	Fe	Zn	24	79-115		120x120	90	90	50	35	150

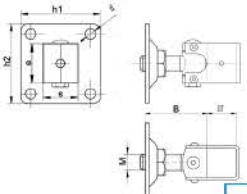

	Quality	Finish	M	M	B	d	h1±h2	a	x	Qmax (kg)
D4/53-M16-30x30 new	Fe	Zn	30x30	16	75-80	11	80x80	48	38	100
D4/53-M20-40x40			40x40	20			100x100		48	150

Art.
KAT-INOX-2019/20 new

Art.
KAT-GATES-2018/19

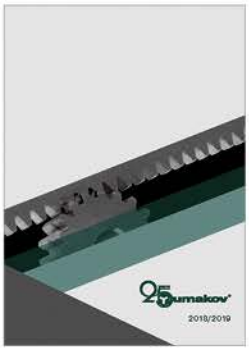

Art.
KAT-AUTOMATIONS-2018/19

Art.
KAT-MIX-2019/20 new

Art.
PNL/ASM4-03-12

Art.
PNL/ASM5-02-16

Art.
PNL/ASM6-09-16

Art.
PNL/ASM1-02-11

Art.
PNL/ASM2-02-11

Art.
PNL/ASM3-02-11

Art.
PNL/G03-30x42

new

Art.
REK-CASE-INOX3

Art.
PNL/GLASS-AD-1-2017

INOX			ALUMINIUM	ZAMAK
AISI304	AISI316	S.S. 2205		
✓	✓	✓	✓	✓

INOX			ALUMINIUM	ZAMAK
AISI304	AISI316	S.S. 2205		
✓	✓	✓	✓	✗

INOX			ALUMINIUM	ZAMAK
AISI304	AISI316	S.S. 2205		
✗	✓	✓	✓	✗

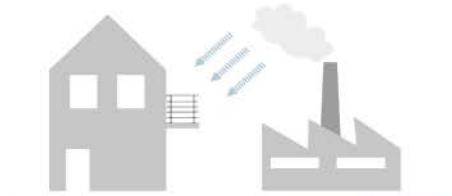

INOX			ALUMINIUM	ZAMAK
AISI304	AISI316	S.S. 2205		
✗	✓	✓	✓	✗

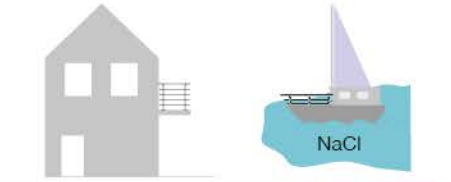

INOX			ALUMINIUM	ZAMAK
AISI304	AISI316*	S.S. 2205		
✗	✓	✓	✓	✗

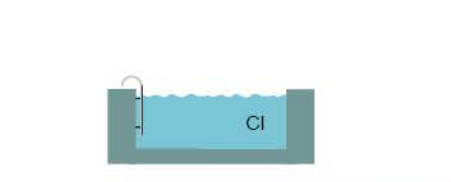

INOX			ALUMINIUM	ZAMAK
AISI304	AISI316	S.S. 2205		
✗	✗	✓	✗	✗

		SK	PL	HU	GB	DE	FR
material	AISI304 AISI316 S.S. 2205	nerezová oceľ	stal nierdzewna	rozsdamentes acél	stainless steel	Edelstahl	INOX
	ALUMINIUM	hliník	aluminium	alumínium	aluminium	Aluminium	aluminium
	ZAMAK	zliatina Zn+Al	stop cynku i aluminium	Zn+Al ötvözet	ZAMAC	Zinkdruckguss	alliage Zn+Al
	Fe	železo	żelazo	vas	iron	Eisen	fer
	Zn	zinok	cynk	cink	zinc	Zink	zinc
	Brass	mosadz	miedź	sárgaréz	brass	Messing	laiton
	PVC	PVC	PVC	PVC	PVC	PVC	PVC
	Rubber	guma	guma	gumi	rubber	Gummi	gomme
	Beech	buk	buk	bükk	beech	Buche	hêtre
	Oak	dub	dąb	tölgy	oak	Eiche	chêne
	VSG/ESG	sklo	szkło	üveg	glass	Glas	verre
finish/effect	satin	brus K320	szlif K320	szálcsiszolt K320	brushed K320	geschliffen K320	brossé K320
	polish	lesk	polerowany	tükör polírozott	polished	poliert	poli
	raw	surový	surowy	nyers	raw	roh	brossé
	natural	nebrúsený	neszlifovany	natúr	rough	ungeschliffen	non-brossé
	black	čierny	czarny	fekete	black	schwarz	noir
	white	biely	biały	fehér	white	weiß	blanc
	gray	sivý	siwy	szürke	gray	grau	gris
	INOX	nerez	nierdzewny	rozsdamentes	inox	Edelstahl	inox
	ELOX	eloxovaný	anodowany	eloxált	elox	Eloxiert	anodisé
		potrebné úpravy	niezbędne przystosowanie	szükséges módosítás	necessary modification	Anpassung ist notwendig	modification nécessaire
	not assembled	nezmontované	niezłożone	nem összeszerelt	not assembled	unmontiert	non assemblé
	~	približný rozmer	przybliżone wymiary	közelítő méretek	approximate dimension	die Abmessungen sind ungefähr	dimensions approximatives
	top	najpredávanejšie	bestseller	legjobban eladott	best seller	Bestseller	best-seller
	new	novinka 2019	nowość 2019	új 2019	new 2019	Neuheit 2019	nouveau 2019
	new	novinka 2020	nowość 2020	új 2020	new 2020	Neuheit 2020	nouveau 2020

INOX AISI 304
- vhodný do prostredia bez chlóru a oxidu siričitého

INOX AISI 316
- vhodný do prostredia s vysokým obsahom chlóru, oxidu siričitého, vysokej vlhkosti, do prímorských regiónov

INOX S.S. 2205- vhodný do prostredia s vysokým obsahom chlóru, oxidu siričitého,
vysokej vlhkosti s prítomnosťou soli na pobreží a na voľnom mori.

INOX AISI 304
- suitable for the environment without chlorine and sulphur dioxide load

INOX AISI 316
- suitable for the environment with a high content of chlorine, sulphur dioxide load, high humidity, coastal regions

INOX S.S. 2205
- Suitable for environments with a high content of chlorine, sulfur dioxide, high humidity with salt on the coast and on the high seas.

INOX AISI 304
- przeznaczone dla środowiska bez dwutlenku siarki oraz chloru

INOX AISI 316
- przeznaczone dla środowiska o wysokiej zawartości dwutlenku siarki oraz chloru, wysokiej wilgotność oraz w regionach nadmorskie

INOX S.S. 2205
- Nadaje się do środowisk o wysokiej zawartości chloru, dwutlenku siarki, o wysokiej wilgotności, o dużym zasoleniu, w strefach nadmorskich, lub w bezpośrednim kontakcie z wodą morską.

INOX AISI 304
- alkalmazható olyan környezetben, ahol nincs klór és kén-dioxid terhelés

INOX AISI 316
- alkalmazható olyan környezetben, ahol magas a klór-, vagy kén-dioxid terhelés, magas a páratartalom, tengerparti régiókban

INOX S.S. 2205
-„Alkalmazható magas klór-, kén-dioxid-, sós nedvességtartalmú környezetben, valamint tengerparton és a nyílt tengeren".

INOX AISI 304
- geeignet in Umgebung ohne Chlor und Schwefeldioxid

INOX AISI 316
- geeignet in Umgebung mit einem hohen Gehalt an Chlor, Schwefeldioxid oder in Umgebung mit hoher Luftfeuchtigkeit, in Küstenregionen

INOX S.S. 2205
- geeignet für Umgebungen mit hohem Gehalt an Chlor, Schwefeldioxid und hoher Luftfeuchtigkeit mit Salz an der Küste und auf hoher See

INOX AISI 304
- Convenable pour les environnements sans chlore et/ ou bioxyde de soufre

INOX AISI 316
- Convenable pour les environnements avec un contenu élevé de chlore et/ ou de bioxyde de soufre, une grande humidité, régions maritimes

INOX S.S. 2205
- Convenable au milieu avec un contenu élevé du dioxyde de soufre, ainsi qu'au milieu humide contentant du sel, tel que le bord de mer ou la mer ouverte.

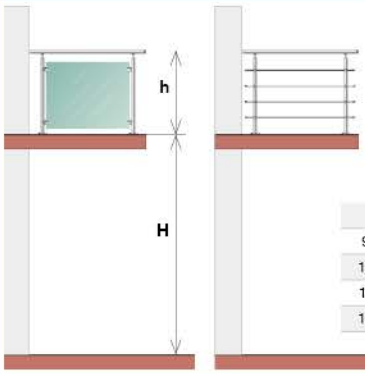

EN 743305
EN 734130

h	H
90cm	< 3m
100cm	< 12m
110cm	< 30m
120cm	> 30m

LEGEND

UMAKOV SK

KROMPACHY
Hornádska 337
053 42

+421 517 911 491
+421 905 681 337
+421 905 429 377
info@umakovshop.sk

www.umakovshop.sk
objednavky@umakov.sk

+421 908 944 153
obchod1@umakov.sk

+421 910 262 707
obchod2@umakov.sk

+421 908 986 081
obchod3@umakov.sk

SERVIS
+421 910 262 820
+421 911 664 245
+421 911 383 645
servis@umakov.sk

REKLAMÁCIE
+421 911 915 952
+421 514 881 915
reklamacie@umakov.sk

ÚČTOVNÉ ODDELENIE
+421 911 080 261
+421 911 750 326
+421 514 881 910-2
uctovne@umakov.sk

MARKETING
+421 915 781 139
marketing@umakov.sk

BRATISLAVA
Rožňavská 1
831 04

+421 917 739 412
+421 904 644 378
ba@umakov.sk

BANSKÁ BYSTRICA
Zvolenská cesta 17
974 05

+421 905 304 548
+421 911 664 245
bb@umakov.sk

PREŠOV
Ľubochnianska 7
080 01

+421 908 944 153
po@umakov.sk

REVÚCA
+421 911 664 245
ra@umakov.sk

UMAKOV CZ

ŘÍČANY U BRNA
Nám. Osvobození 63
664 82

+ 420 775 455 079
info@umakov.cz

Umakov CZ s.r.o.
IČ: 01692771
DIČ: CZ01692771

www.umakov.cz
objednavky@umakov.cz

+420 608 743 164
obchod1@umakov.cz

+420 774 533 989
obchod2@umakov.cz

+420 608 313 799
obchod3@umakov.cz

SERVIS
+420 212 240 996
+420 778 001 899
+420 775 455 079
servis@umakov.cz

REKLAMACE
+421 911 915 952
reklamace@umakov.cz

ÚČETNÍ ODDELĚNÍ
+420 774 533 989
+420 608 313 799
ucetni@umakov.cz

PRAHA - OTICE
Otice 40
25163 Stančice

+420 731 733 989
+420 775 061 735
praha@umakov.cz

HRADEC KRÁLOVÉ
Náchodská 607
503 01

+420 774 338 660
+420 778 001 899
hk@umakov.sk

OSTRAVA
+420 778 065 444
ostrava@umakov.cz

UMAKOW PL

ZABRZE
A. Pawliczka 27A
41-800

+48 517 534 197
info@umakov.pl

www.umakow.pl
zamowienie@umakow.pl

+48 517 534 197
sprzedaz1@umakow.pl

+48 500 110 199
sprzedaz2@umakow.pl

+48 668 494 940
sprzedaz3@umakow.pl

GDAŃSK
Województwa:
Pomorskie
Warmińsko-mazurskie
Kujawsko-pomorskie
Zachodniopomorskie
+48 735 419 155
+48 538 110 766
gdansk@umakow.pl

RADOM
Województwa:
Podlaskie
Lubelskie
Mazowieckie
Świętokrzyskie
Łódzkie
+48 664 855 695
radom@umakow.pl

NOWY SACZ
Województwa:
Małopolskie
Podkarpackie
Śląskie
+48 510 696 236
nowysacz@umakow.pl

POZNAŃ
Województwa:
Lubuskie
Wielkopolskie
Dolnośląskie
Opolskie
+48 602 335 611
poznan@umakow.pl

UMAKOV HU

BUDAPEST
Csonka János út.1
2142

3628920870-9
info@umakov.hu

www.umakov.hu
megrendeles@umakov.hu

+ 36 306 446 653
ertekesites1@umakov.hu

+ 36 305 754 157
ertekesites2@umakov.hu

+ 36 306 446 653
erteksites3@umakov.hu

+ 36 307 572 009
erteksites4@umakov.hu

BUDAPEST
+ 36 305 662 474
hungary3@umakov.hu

MISKOLC
+ 36 301 610 011
miskolc@umakov.hu

PARTNER EU

www.umakovshop.com

UMAKOV SK

www.umakov.sk
umakov@umakov.sk
+421 908 994 153
+421 905 681 337

UMAKOV CZ

www.umakov.cz
umakov@umakov.cz
+420 608 743 164
+420 212 240 751

UMAKOW PL

www.umakow.pl
umakow@umakow.pl
+48 517 534 197
+48 510 696 236

UMAKOV HU

www.umakov.hu
umakov@umakov.hu
+36 306 446 653
+36 305 754 157

UMAKOV DE

www.umakov.de
umakov@umakov.de
+421 907 684 761
+421 51 4881 933

UMAKOV UK

www.umakovshop.com
uk@umakovshop.com
+421 915 093 533
+421 51 4881 931

UMAKOV EUROPE

www.umakovshop.com
europe@umakovshop.com
+421 915 965 141
+421 51 4881 930

UMAKOV SCANDINAVIA

www.umakovshop.com
scandinavia@umakovshop.com
+421 915 093 533
+421 51 4881 931

UMAKOV RUSSIA

www.umakovshop.com
russia@umakovshop.com
+421 915 093 533
+421 51 4881 931

UMAKOV FRANCE

www.umakovshop.fr
info@umakovshop.fr
tel: +33 (0)2.31.39.49.80
fax:+33 (0)2.31.39.66.74

UMAKOV WORLD

www.umakovshop.com
info@umakovshop.com
+421 915 965 141
+421 51 4881 930

EUROPEAN UNION
European Regional Development Fund
Operational Programme Enterprise
and Innovations for Competitiveness